OPERATIONAL VIEW

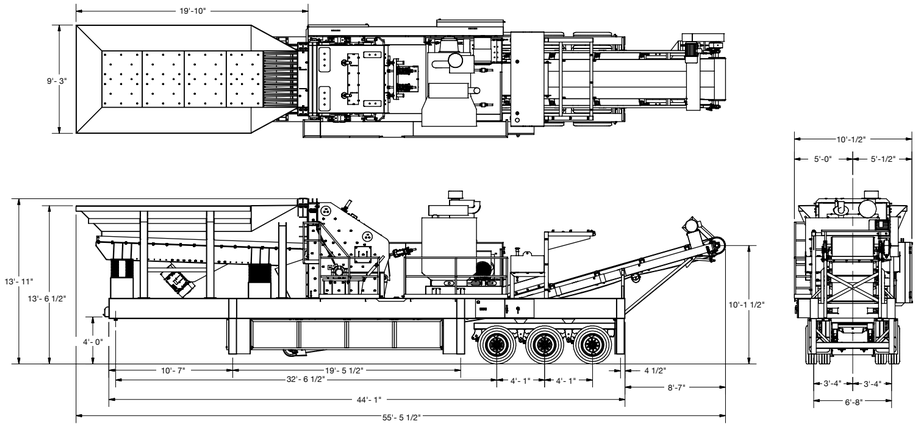

TRANSPORTATION VIEW

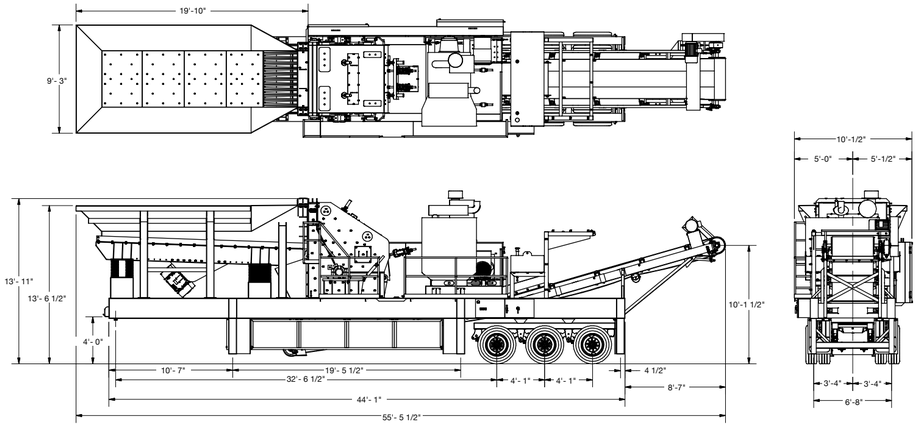

5 YEAR ROTOR warranty

INERTIA MACHINE CORPORATION • 730 S HANCOCK AVE • FREEPORT IL 61032 • p 815.233.1619 f 815.233.4446 • **www.inertiamac.com**

Inertia

5066 HAWK

Primary HSI Crusher
Up to 700 TPH



www.inertiamac.com

Inertia

5066 HAWK

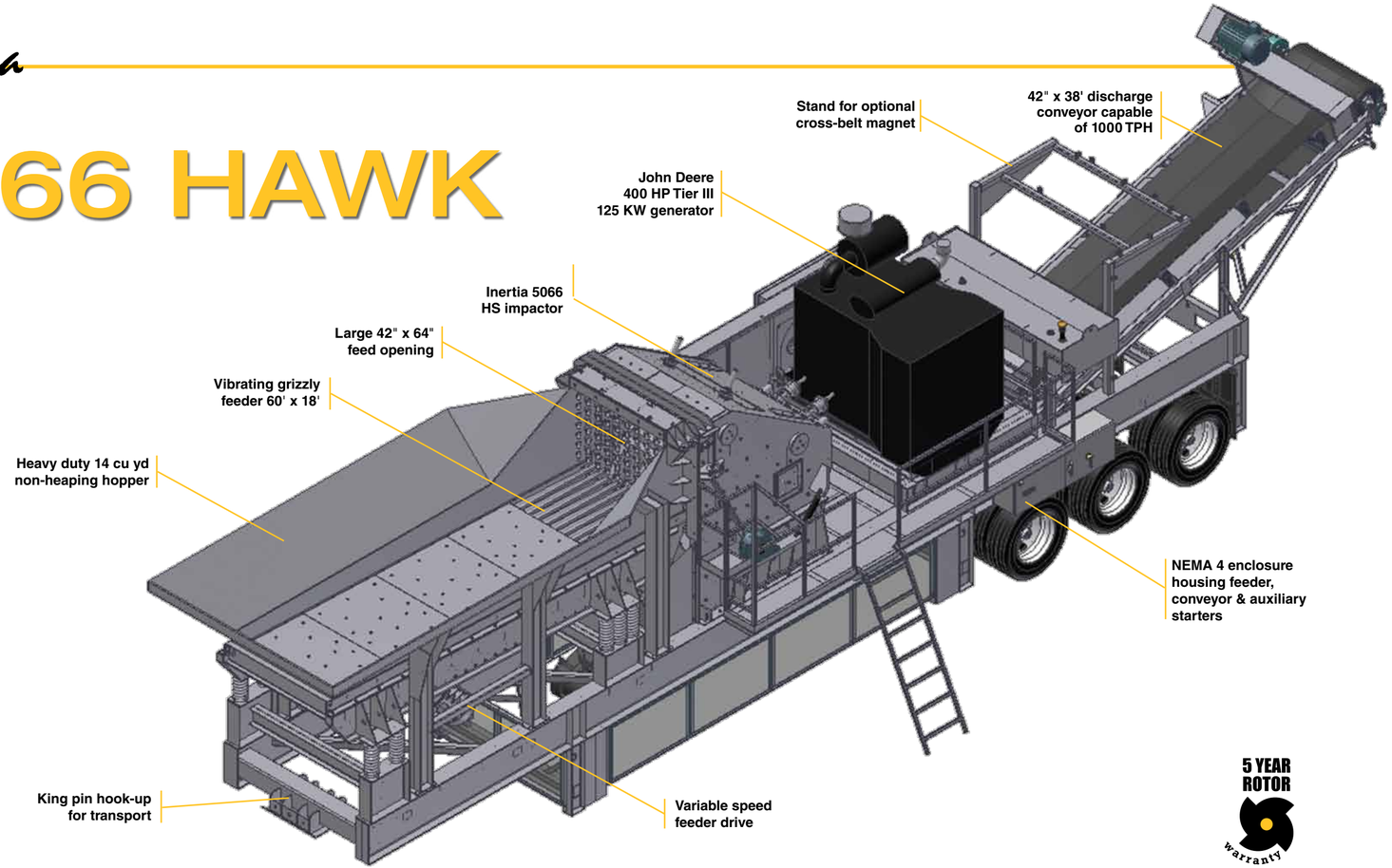

5 YEAR ROTOR warranty

INERTIA ROTOR

- Four bar rotor allows two & four bar arrangements to optimize performance in a variety of applications
- Large 50”x 65” open-style ribbed rotor delivers high inertia and requires less HP and fuel to operate
- Two adjustable aprons allowing high reduction rations with a more cubical product and fewer fines. Apron liners are interchangeable and reversible
- 49”x 67” feed opening permits immediate impact of large product, decreasing the chance of bridge material

Impactor	HS 5066
Impactor Weight	42,000 lbs.
Plant Weight	100,000 lbs.
Travel Width	10'-½"
Travel Height	13'-11"
Overall Length	55'-5½"
Rotor Diameter & Width	50"dia - 65" wide
Feed Opening	42"H-64"W
Vibrating Grizzly Feeder	5'x18' (with 4' Grizzly and 5" nominal spacing)
Feed Hopper Capacity	14 cubic yards (non heaping)
Power Supply	400HP Diesel-125 KW Generator
Hydraulic Lift/Leveling System	(2) 24" stroke legs w/optional (4) 24" stroke run-on legs
Discharge System	42" x 38' rear discharge conveyor