OPERATIONAL VIEW

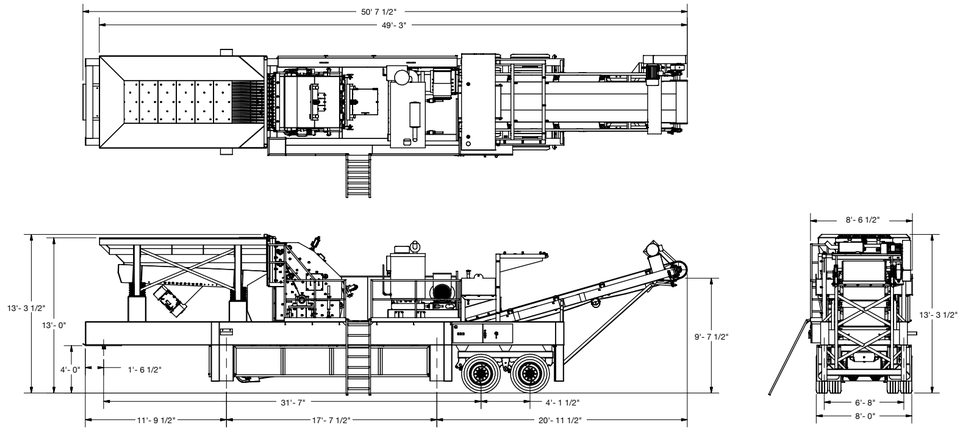

TRANSPORTATION VIEW

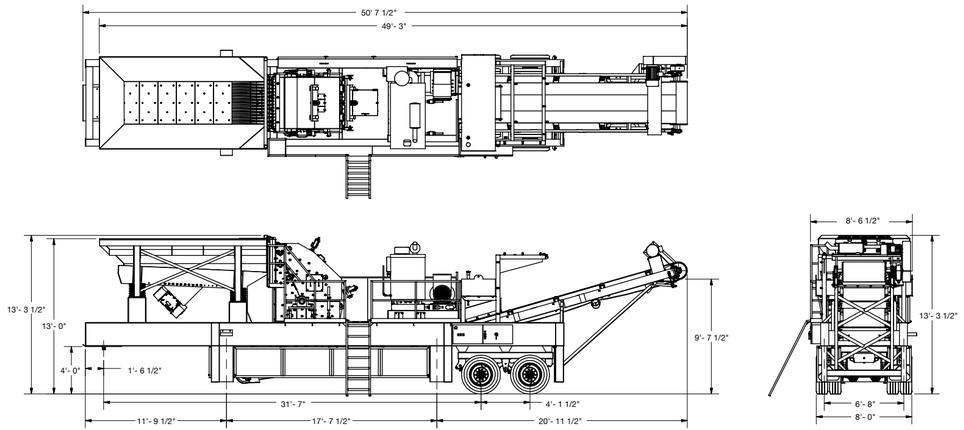

5 YEAR ROTOR warranty

INERTIA MACHINE CORPORATION • 730 S HANCOCK AVE • FREEPORT IL 61032 • p 815.233.1619 f 815.233.4446 • **www.inertiamac.com**

Inertia

4048 PHOENIX

Primary HSI Crusher
Up to 300 TPH



www.inertiamac.com

MADE IN THE USA

Inertia

4048 PHOENIX

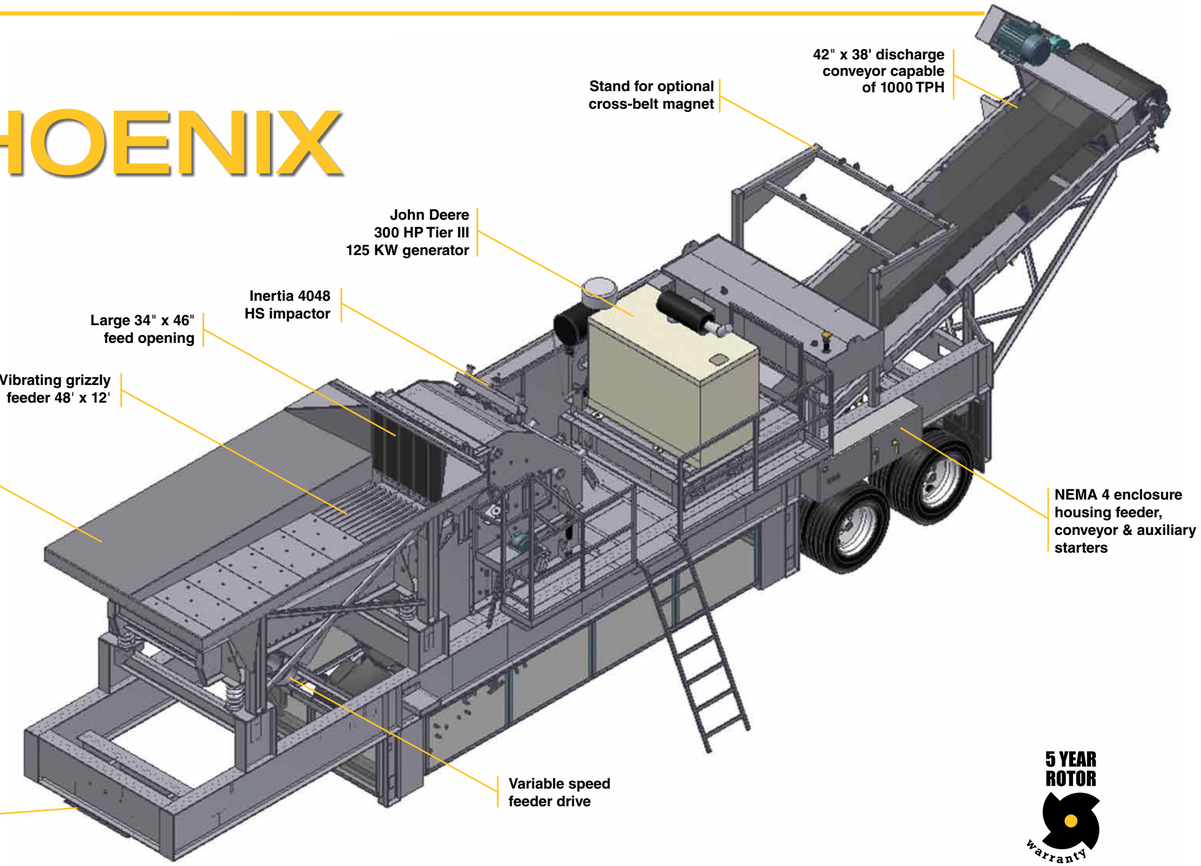

5 YEAR ROTOR warranty

INERTIA ROTOR

- Three bar rotor for optimum performance in a variety of applications
- Large 40" x 48" open-style ribbed rotor delivers high inertia and requires less HP and fuel to operate
- Two adjustable aprons allowing high reduction rations with a more cubical product and fewer fines. Apron liners are interchangeable and reversible.
- 34" x 46" feed opening permits immediate impact of large product, decreasing the chance of bridge material

Impactor	3 bar - 4048
Plant Weight	73,000 lbs.
Travel Width	8'-7"
Travel Height	13'-3"
Travel Length	50'-7½"
Rotor Diameter & Width	40" dia - 48" W
Feed Opening	34" H - 46" W
Vibrating Grizzly Feeder	48" x 12'
Feed Hopper Capacity	7 cubic yards
Grizzly Feeder	48" x 12' (with 3' grizzly section and 2" nominal spacing)
Power Supply	300 HP Diesel-125 KW Generator
Hydraulic Lift/Leveling System	(2) 24" stroke legs (optional (4) 24" stroke run-on legs)
Discharge System	42" x 38' rear discharge conveyor