EVOQUIP®
A TEREX BRAND

CAIMAN 150

COMPACT SHREDDER

DESIGNED & BUILT BY TEREX



The Caiman 150 is a compact shredder which has been designed to excel in the most demanding recycling applications.

- Twin shaft slow speed & high torque
- Quick removal of shafts
- Versatile design for multiple applications

COMPACT SHREDDER

CAIMAN 150

The EvoQuip Caiman 150 is the first shredder added to the expanding product range. A Terex designed and built machine, it is designed to excel in the most demanding recycling applications.

The Caiman 150 provides high output with low operational costs and can be used in multiple applications such as C&D, asphalt, skip waste, green waste, wood, household waste and mattresses.

Its compact and robust design allows it to be used in the smallest of spaces whilst maintaining an aggressive and powerful shredding system. With an intuitive control system, the Caiman 150 is user friendly, and its compact transport envelope allows it to be transported easily between sites.

KEY FEATURES & BENEFITS

FEATURE	BENEFIT
Versatile design for multiple applications	The Caiman 150 can work in multiple applications with only a shaft change needed to go from C&D to other waste types
Twin slow speed high torque shafts	Slow speed shafts which produce up to 80,000Nm per shaft allow the Caiman 150 to work in the most demanding applications
Intuitive Control System	The Intuitive Control system makes the plant extremely easy to use and perfect for inexperienced users or the rental market
Default and Customisable shredding programs	Through extensive R&D engineering, predetermined default shredding programs come standard for most common applications, making the Caiman 150 very easy to use. The numerous customisable shredding settings allow the operator to program the machine to the most optimal setup for their specific application
Quick removal of shafts/ combs	Shafts can be changed in an hour which allows the end user to go from working in C&D to mattresses for example with one plant very quickly
Asynchronous shredding action	Asynchronous shredding allows each shaft to operate independently to maximise production
Compact robust design	The Compact robust design allows the plant to manoeuvre in small sites easily whilst being fit for most demanding applications
Hydrostatic drive	Offers high efficiency and protection against contamination
Double shaft shredder	1.5m long shafts offer impressive throughput and excellent reduction
Easy service access	Increases uptime

HOPPER
2.5m^3 Hopper Capacity
1.8m x 2.6 chamber target area

POWERUNIT
T3: Cat C4.4 129kW @ 1850rpm
Stage V/T4F: Cat C4.4 140kW @ 1850rpm
Efficient hydrostatic drive arrangement

MAIN CONVEYOR
800mm wide product conveyor
3.3m Discharge height
Chevron belt



SHREDDING CHAMBER
Twin shaft slow speed & high Torque chamber
Shaft length – 1500mm
Shaft diameter – 250mm
Torque per shaft – 80,000 Nm
Asynchronous shredding action
Ability to use predetermined shredding modes or operator defined
Quick removal of shaft and comb assembly
Two shaft options available
Bolt in wear lines on each side

TRANSPORT
8.4m x 2.5m x 3.05m (27' 8" x 8' 2" x 10')
Weight – 16,500 Kg (36,376lbs)

OPTIONS
Overband Magnet
Tracks & Hooklift
Chamber Camera
Reversible Engine Fan

APPLICATIONS

Construction & Demolition
Asphalt
Skip Waste
Green Waste
Wood
Household Waste
Mattresses

COMPACT SHREDDER

CAIMAN 150

SHREDDING CHAMBER



C&D Shafts

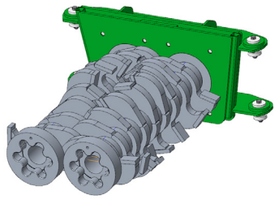

Waste/General Shafts

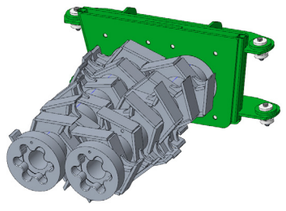

Combs

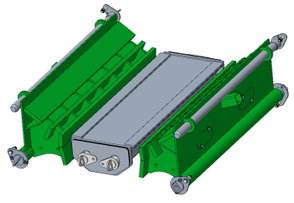

DIMENSIONS

TRANSPORT

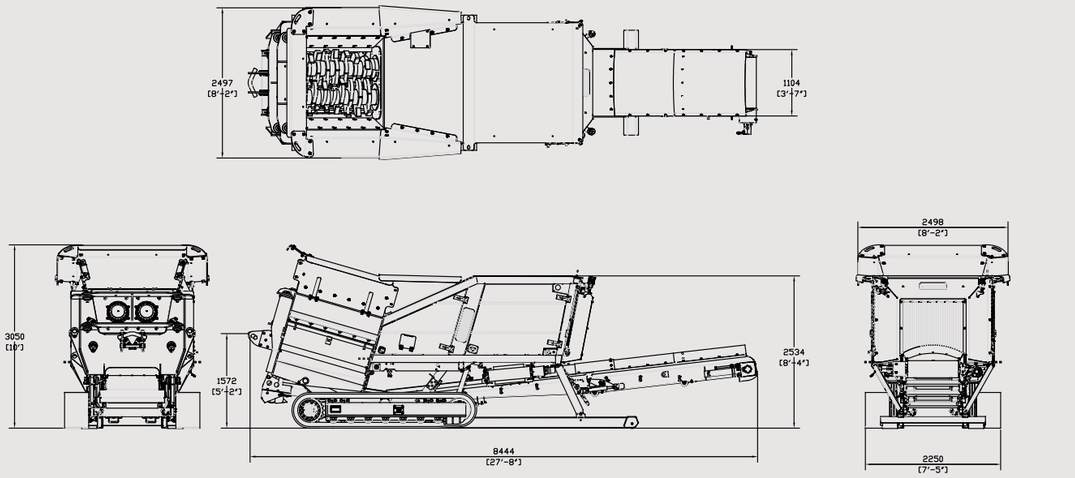

WORKING

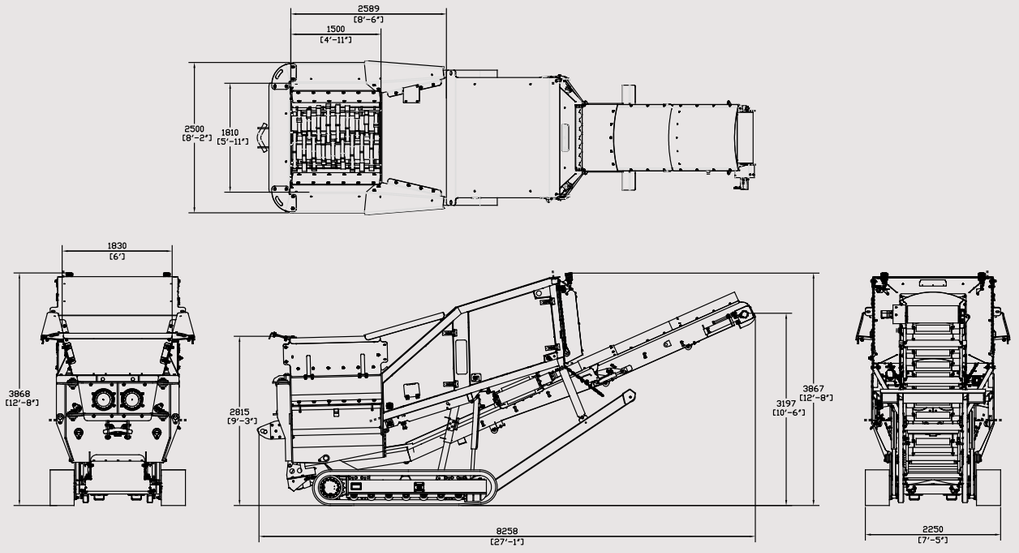



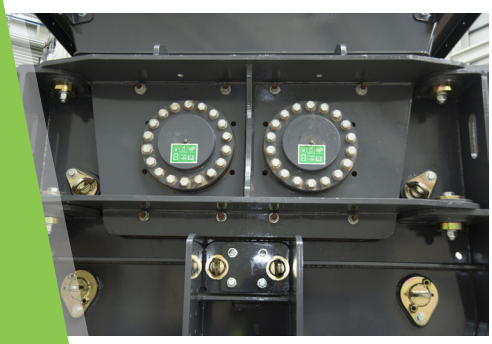

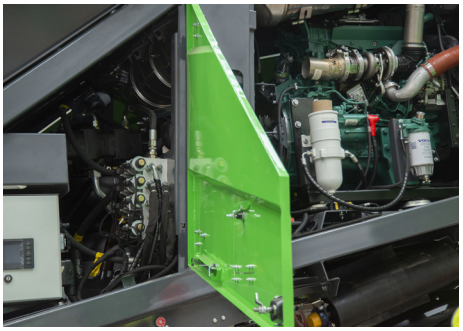



200 Coalisland Road,
Dungannon, Co. Tyrone, BT71 4DR
Tel: +442887718500
Email: evoquip@terex.com

terex.com/EvoQuip

The material in this document is for information only and is subject to change without notice.

EvoQuip assumes no liability resulting from errors or omissions in this document, or from the use of the information contained herein.

Due to continual product development we reserve the right to change specifications without notice. Product performance figures given in this brochure are for guidance purposes only, this information does not constitute an expressed or implied warranty or guarantee, but shows test examples. These results will vary depending on application. Photographs are for illustrative purposes only; some or all of the machines in the illustrations may be fitted with optional extras. Please check with your Dealer for details on optional extras.

Published and Printed in August 2023. All machines are CE Approved.

© Terex Corporation 2023