# POWERSCREEN®
# CHIEFTAIN 1700X

## 2 DECK INCLINE SCREEN

GET STARTED




**TECHNICAL SPECIFICATION** - REV 0 01/02/2020

To use my interactive features I need to be opened in 'Adobe Acrobat Reader' click here to download



# CHIEFTAIN 1700X 2 DECK


- OVERVIEW
- HOPPER & GRID
- SCREENBOX
- MAIN CONVEYOR
  - TAIL CONVEYOR
  - SIDE CONVEYORS
- POWER UNIT & HYDRAULICS
- TRACKS
- OPTIONS
  - OTHER OPTIONS
- POWERSCREEN® PULSE
- DIMENSIONS


# OVERVIEW

## SPECIFICATION

| | | 14ft Hopper (with grid) |
|---|---|---|
| **Total weight** | | 27,660kg (60,980lbs) |
| **Transport** | **Length** | 16.6m (54' 6") |
| | **Width** | 3m (9' 10") |
| | **Height** | 3.44m (11' 3") |
| **Working** | **Length** | 17.2m (56' 5") |
| | **Width** | 17.3m (56' 11") |
| | **Height** | 5.89m (19' 4") |
| **Screenbox** | | 4.8m x 1.5m (16' x 5') |
| **Power Unit** | | Diesel / Hydraulic |
| **Plant Colour** | | RAL 5021, RAL 7024 & RAL 9005 |

(Weight & dimensions are approximate base unit values)

## FEATURES & BENEFITS

- High capacity up to 500 tph / 551 US tph (depending on media sizes & material type)
- Maximum feed size 150mm (6'')
- Ability to easily change between 2 and 4 bearings using patent pending drive system
- Engine protection shutdown system
- Power unit featuring a transverse engine arrangement to aid access & serviceability
- Heavy duty single shaft incline screenbox with adjustable stroke, angle & speed
- Hydraulic screen tensioning
- Screen mesh access system for quicker mesh changes
- Maximum mobility with heavy duty, low ground pressure tracks
- Removable heavy duty pendant remote control system
- Quick set up time
- High performance hydraulic system - cast iron pumps & motors complete with hydraulic cooler
- Low profile double deck vibrating grid option with radio remote control tipping grid, angle adjustable & fully riveted construction
- Hydraulically folding conveyors for transport
- Fines conveyor drop down facility to aid bottom deck mesh access
- Hydraulic raise / lower of head section for mesh access

## APPLICATIONS

**Aggregate**
Sand & gravel
Blasted rock
River rock

**Recycling**
Top soil
C&D waste
Composted materials
Wood by-products
Overburden
Foundry waste

**Mining**
Processed ores
Processed minerals



## CHIEFTAIN 1700X 2 DECK


- OVERVIEW
- HOPPER & GRID
- SCREENBOX
- MAIN CONVEYOR
  - TAIL CONVEYOR
  - SIDE CONVEYORS
- POWER UNIT & HYDRAULICS
- TRACKS
- OPTIONS
  - OTHER OPTIONS
- POWERSCREEN® PULSE
- DIMENSIONS


# HOPPER & GRID

**Target area:** 4.75m (15' 7") long x 2m (6' 7'') wide
**Grid aperture:** 108mm (4.3'')

**Hopper capacity with grid:** 5.35m³ (7 cu. yd.)
Adjustable angle tipping grid with integral loading and wing plates
**Feed in height rear with grid:** 3.59m (11' 9")
**Feed in height rear without grid:** 2.65m (8' 8")





## CHIEFTAIN 1700X 2 DECK


- OVERVIEW
- HOPPER & GRID
- SCREENBOX
- MAIN CONVEYOR
  - TAIL CONVEYOR
  - SIDE CONVEYORS
- POWER UNIT & HYDRAULICS
- TRACKS
- OPTIONS
  - OTHER OPTIONS
- POWERSCREEN® PULSE
- DIMENSIONS


# SCREENBOX

4.8m x 1.5m (16' x 5') 2 deck incline screen
Highly aggressive screen drive
Grease filled 2 or 4 bearing screenbox (leaves the factory as 4 bearing)

4.8m x 1.5m (16' x 5') top deck
4.12m x 1.52m (13' 6'' x 5') bottom deck

4 of media sections (side tension) top deck
2 of media sections (end tension) bottom deck

Hydraulic screen angle adjustment 20° - 34°
Hydraulic screen tensioning on bottom deck
Galvanised walkways on 3 sides of the screenbox

**Speed:** 1140rpm (standard)
**Throw:** 6.25mm (standard)

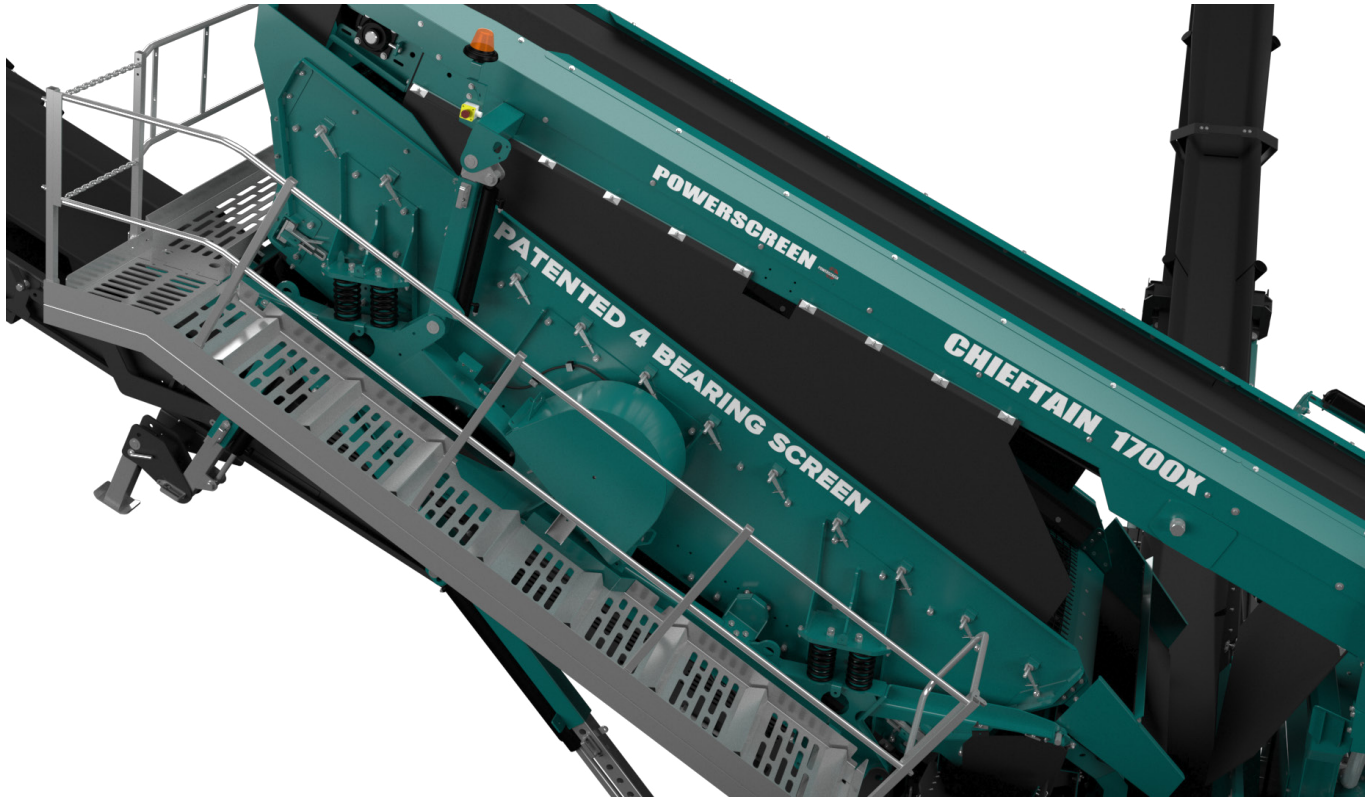



## CHIEFTAIN 1700X 2 DECK


- OVERVIEW
- HOPPER & GRID
- SCREENBOX
- MAIN CONVEYOR
  - TAIL CONVEYOR
  - SIDE CONVEYORS
- POWER UNIT & HYDRAULICS
- TRACKS
- OPTIONS
  - OTHER OPTIONS
- POWERSCREEN® PULSE
- DIMENSIONS


# CONVEYORS

### FEED CONVEYOR

1050mm (41'') wide feed conveyor with direct drive system & hydraulic variable speed control

4.11m (13' 6") drum centres

350mm (13.7") drum diameter (drive)

320mm (12.6") drum diameter (tail)

Feeder stop / start comes as standard

### MAIN CONVEYOR

1050mm (41") 3 ply plain belt

9.89m (32' 5") drum centres

286mm (11.3") drum diameter (drive)

270mm (10.6") drum diameter (tail)

Hydraulically adjustable conveyor, fully skirted & sealed





## CHIEFTAIN 1700X 2 DECK


- OVERVIEW
- HOPPER & GRID
- SCREENBOX
- MAIN CONVEYOR
  - TAIL CONVEYOR
  - SIDE CONVEYORS
- POWER UNIT & HYDRAULICS
- TRACKS
- OPTIONS
  - OTHER OPTIONS
- POWERSCREEN® PULSE
- DIMENSIONS


# CONVEYORS

### FINESIZE - TAIL CONVEYOR

1200mm (47”) wide 3 ply plain belt
6.88m (22’ 7”) drum centres
286mm (11.3”) drum diameter (drive)
270mm (10.6”) drum diameter (tail)

4.62m (15’ 2’’) stockpile height
147m³ (192 cu. yd.) stockpile volume

Fixed speed
Hydraulically folding
Chevron belt as option
Angle adjustment: 16⁰ - 28.5⁰





## CHIEFTAIN 1700X 2 DECK


- OVERVIEW
- HOPPER & GRID
- SCREENBOX
- MAIN CONVEYOR
  - TAIL CONVEYOR
  - SIDE CONVEYORS
- POWER UNIT & HYDRAULICS
- TRACKS
- OPTIONS
  - OTHER OPTIONS
- POWERSCREEN® PULSE
- DIMENSIONS


# CONVEYORS

### MID-FINESIZE & MID-OVERSIZE - SIDE CONVEYORS

650mm (26”) wide 3 ply chevron belt
9.67m (31’ 9”) drum centres
286mm (11.3”) drum diameter (drive)
270mm (10.6”) drum diameter (tail)

4.69m (15’ 4”) stockpile height
153m³ (200 cu. yd.) stockpile volume

Variable speed control on each conveyor
Hydraulically folding
Fixed angle: 24⁰





## CHIEFTAIN 1700X 2 DECK


- OVERVIEW
- HOPPER & GRID
- SCREENBOX
- MAIN CONVEYOR
  - TAIL CONVEYOR
  - SIDE CONVEYORS
- POWER UNIT & HYDRAULICS
- TRACKS
- OPTIONS
  - OTHER OPTIONS
- POWERSCREEN® PULSE
- DIMENSIONS


# POWER UNIT & HYDRAULICS

**Engine Tier 3:**
CAT C4.4

**Performance:**
77 kW (104hp) @ 1800rpm

**Engine Stage IIIA Constant Speed:**
CAT C4.4 CS

**Performance:**
98 kW (131hp) @ 1800rpm

**Engine Tier 4F / Stage IV:**
CAT C4.4

**Performance:**
82 kW (110hp) @ 1800rpm

**Engine Stage V:**
CAT C4.4

**Performance:**
98 kW (131hp) @ 1800rpm

**Tank Capacities:**
Fuel: 336 L (88 US Gal)
Hydraulic oil: 450 L (118 US Gal)

**Pumps:**

| | |
|---|---|
| Flywheel pump: | Cast iron triple 63/41/41cc/rev |
| PTO pump A: | Cast iron triple 23/23/14cc/rev |

**Motors:**

| | |
|---|---|
| Belt feeder: | Cast iron160cc/rev |
| Main conveyor: | Cast iron 630cc/rev |
| Tail conveyor: | Cast iron 500cc/rev |
| Side conveyors: | Cast iron 315cc/rev |
| Screen motor: | Cast iron 80cc/rev |





## CHIEFTAIN 1700X 2 DECK


- OVERVIEW
- HOPPER & GRID
- SCREENBOX
- MAIN CONVEYOR
  - TAIL CONVEYOR
  - SIDE CONVEYORS
- POWER UNIT & HYDRAULICS
- TRACKS
- OPTIONS
  - OTHER OPTIONS
- POWERSCREEN® PULSE
- DIMENSIONS


# TRACKS

| | |
|---|---|
| **Track width:** | 400mm (1' 4'') |
| **Sprocket centres:** | 3285mm (10' 9'') |
| **Gradability degrees:** | 27.15º |
| **Gearbox ratio:** | 1:154 |
| **Hydraulic motor:** | 50.9cc/rev |
| **Approximate speed:** | 0.9kph (0.56mph) |
| **Total flow per track:** | 69 Lpm (approx.) |





## CHIEFTAIN 1700X 2 DECK


- OVERVIEW
- HOPPER & GRID
- SCREENBOX
- MAIN CONVEYOR
  - TAIL CONVEYOR
  - SIDE CONVEYORS
- POWER UNIT & HYDRAULICS
- TRACKS
- OPTIONS
  - OTHER OPTIONS
- POWERSCREEN® PULSE
- DIMENSIONS


# OPTIONS

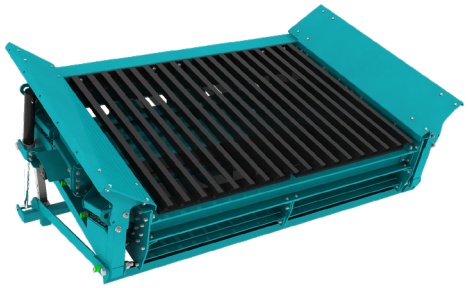

### DOUBLE DECK VIBRATING GRID

**Target area:**
3.91m (12' 10") long x 2.42m (7' 11") wide

**Bottom deck screen size:**
2 of 1.9m (6' 3'') x 1.5m (4' 11'')

**Working angle**:10$^0$ - 20$^0$ (hydraulically adjustable)
**Tip angle**: 45$^0$ max
**Motor**: 56cc/rev
**Circuit**: Coupled to main conveyor circuit.

Minimum feed in height with grid (rear): 3.8m (12' 6")
Increase in transport height: +75mm (3'')
Increase in machine weight: +3750kg (8,267lbs)

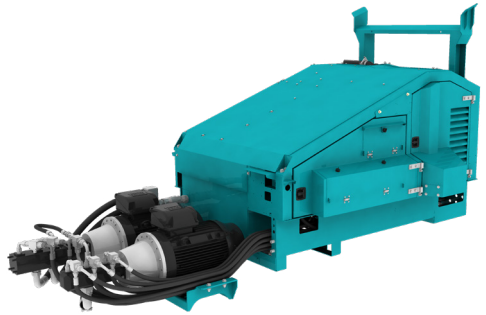

### DUAL POWER

**Dual Power System:**
2 of electric motors; 37 kW (50hp) & 30 kW (40hp) Diesel engine
Integrated control system

This controls either diesel-hydraulic or electric-hydraulic functions

Note: This option may alter transport dimensions and feed access. For further details please contact engineering for detailed drawings and dimensions.



## CHIEFTAIN 1700X 2 DECK


- OVERVIEW
- HOPPER & GRID
- SCREENBOX
- MAIN CONVEYOR
  - TAIL CONVEYOR
  - SIDE CONVEYORS
- POWER UNIT & HYDRAULICS
- TRACKS
- OPTIONS
  - OTHER OPTIONS
- POWERSCREEN® PULSE
- DIMENSIONS


# OPTIONS

### OTHER OPTIONS

- Custom colour machine
- Auto lubrication system
- Anti rollback
- Quick release wedge tensioning for top deck
- Vibrating grid discharge chute
- Crusher feed chute (when double deck vibrating grid is selected)
- Radio controlled tracking
- Hydraulic jacking legs
- Grid aperture: 152mm (6”)
- Adjustable hopper door
- Extra coupling facility
- Screenbox reverse
- Fuel save option
- Bottom deck self cleaning flexi mesh
- Powerscreen Pulse





## CHIEFTAIN 1700X 2 DECK


- OVERVIEW
- HOPPER & GRID
- SCREENBOX
- MAIN CONVEYOR
  - TAIL CONVEYOR
  - SIDE CONVEYORS
- POWER UNIT & HYDRAULICS
- TRACKS
- OPTIONS
  - OTHER OPTIONS
- POWERSCREEN® PULSE
- DIMENSIONS


# POWERSCREEN PULSE

## RECORD, DISPLAY AND ANALYSE DATA:

### HIGH EFFICIENCY THROUGH PRECISE INFORMATION

Available online anywhere and at any time: comprehensive information on the GPS location, start and stop times, fuel consumption, tonnages, cone settings, wear ratings, operating hours, maintenance status, and much more.



**AVAILABLE ANYWHERE AND AT ANY TIME**

**DASHBOARD DISPLAY**

**FLEET OVERVIEW**

**WEEKLY REPORT DIRECT TO YOUR INBOX**

**GPS: MACHINE TRACKING**

**REPORTING**
UTILISATION, PERFORMANCE & PART SPECIFIC





## CHIEFTAIN 1700X 2 DECK


- OVERVIEW
- HOPPER & GRID
- SCREENBOX
- MAIN CONVEYOR
  - TAIL CONVEYOR
  - SIDE CONVEYORS
- POWER UNIT & HYDRAULICS
- TRACKS
- OPTIONS
  - OTHER OPTIONS
- POWERSCREEN® PULSE
- DIMENSIONS


# DIMENSIONS

| | SCREENBOX WORKING ANGLES (DEGREES) | | | | | |
|---|---|---|---|---|---|---|
| DIMENSION (MM) | 20 DEG | 24 DEG | 28 DEG | 30 DEG | 32 DEG | 34 DEG |
| A | 5403 | 5611 | 5809 | 5886 | 5993 | 6098 |
| B | 3157 | 3587 | 4009 | 4216 | 4417 | 4617 |
| C | 17592 | 17461 | 17302 | 17212 | 17114 | 17013 |
| D | 7358 | 7215 | 7045 | 6950 | 6850 | 6742 |

**Figure 1: Chieftain 1700X 2 Deck**
**Working Position**

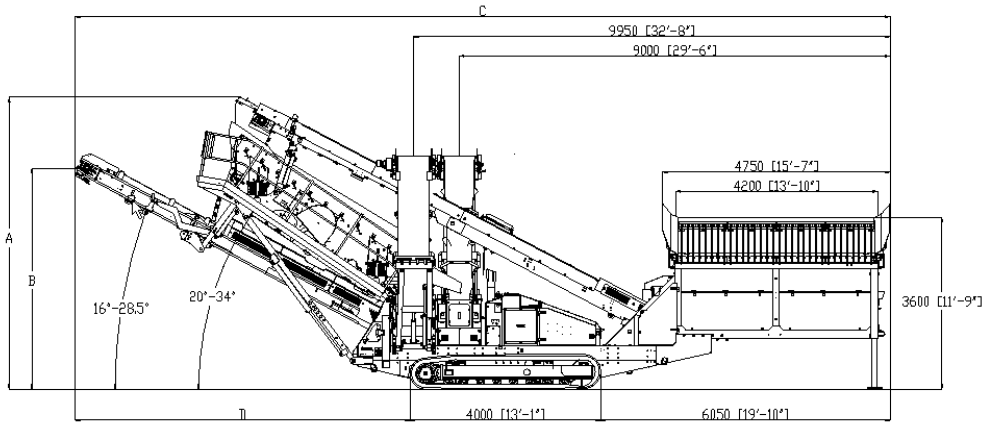


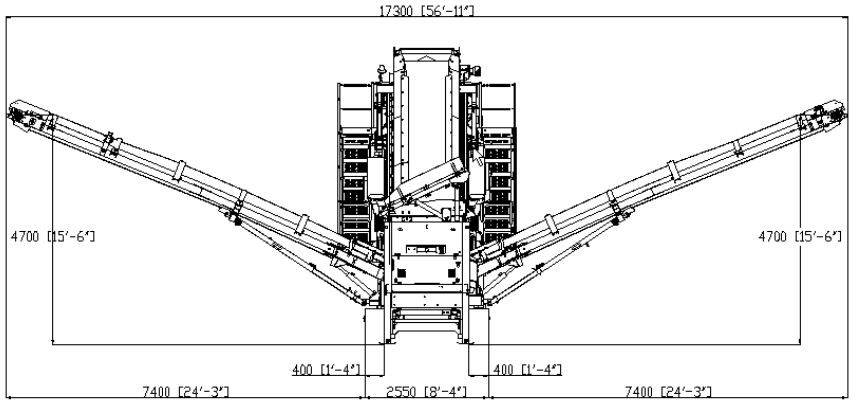


MORE DIMENSIONS OVERLEAF



## CHIEFTAIN 1700X 2 DECK


- OVERVIEW
- HOPPER & GRID
- SCREENBOX
- MAIN CONVEYOR
  - TAIL CONVEYOR
  - SIDE CONVEYORS
- POWER UNIT & HYDRAULICS
- TRACKS
- OPTIONS
  - OTHER OPTIONS
- POWERSCREEN® PULSE
- DIMENSIONS


# DIMENSIONS

Figure 2: Chieftain 1700X 2 Deck
Transport Position

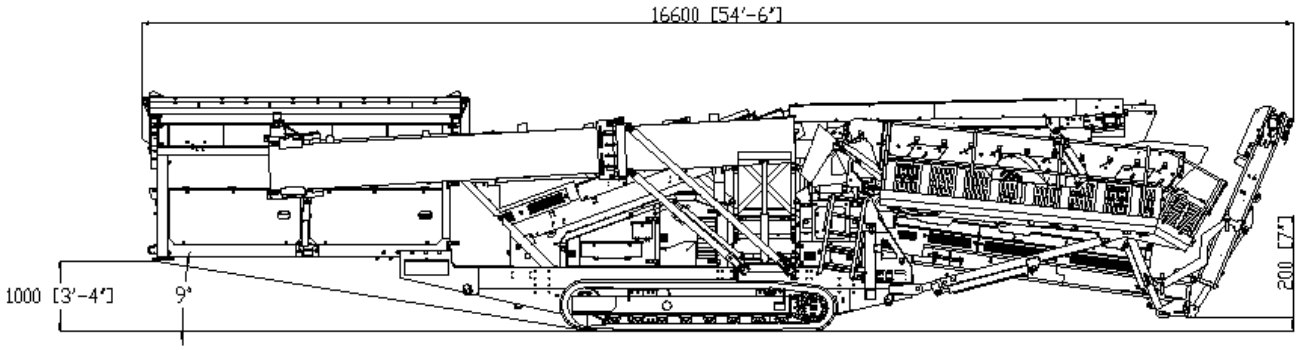


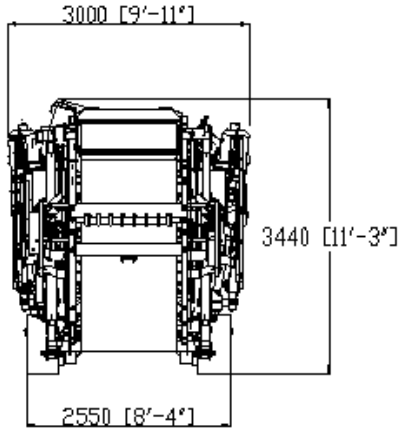


MORE DIMENSIONS OVERLEAF



## CHIEFTAIN 1700X 2 DECK


- OVERVIEW
- HOPPER & GRID
- SCREENBOX
- MAIN CONVEYOR
  - TAIL CONVEYOR
  - SIDE CONVEYORS
- POWER UNIT & HYDRAULICS
- TRACKS
- OPTIONS
  - OTHER OPTIONS
- POWERSCREEN® PULSE
- DIMENSIONS


# DIMENSIONS

| | SCREENBOX WORKING ANGLES (DEGREES) | | | | | |
|---|---|---|---|---|---|---|
| DIMENSION (MM) | 20 DEG | 24 DEG | 28 DEG | 30 DEG | 32 DEG | 34 DEG |
| A | 5403 | 5611 | 5809 | 5886 | 5993 | 6098 |
| B | 3157 | 3587 | 4009 | 4216 | 4417 | 4617 |
| C | 17471 | 17340 | 17181 | 17091 | 16996 | 16892 |
| D | 7358 | 7215 | 7045 | 6950 | 6850 | 6742 |

**Figure 3: Chieftain 1700X 2 Deck**
**Double Deck Vibrating Grid**
**Working Position**

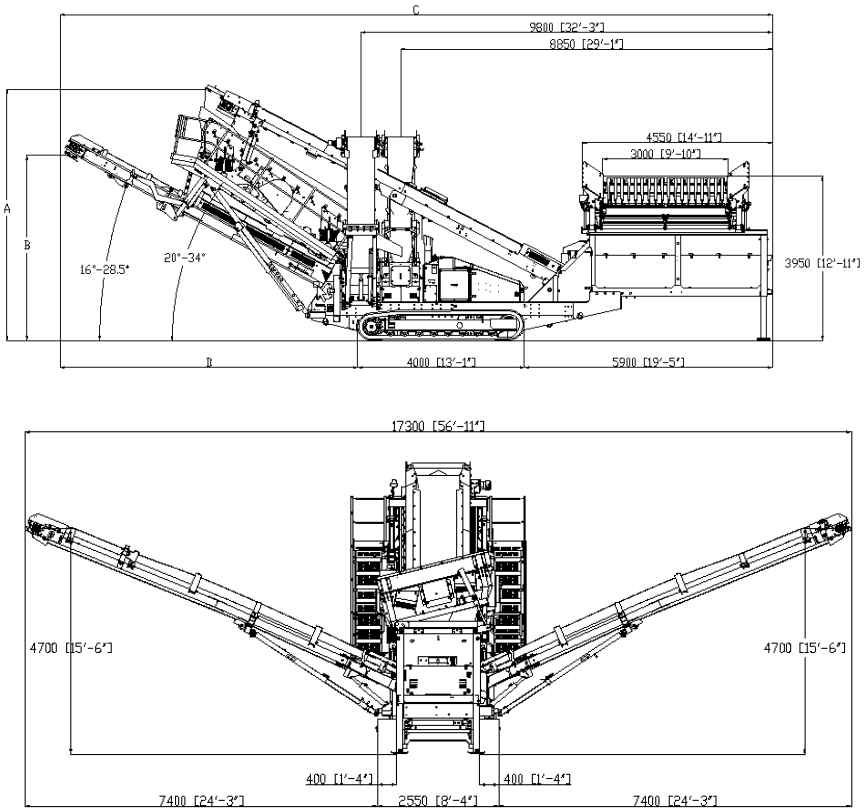


MORE DIMENSIONS OVERLEAF



## CHIEFTAIN 1700X 2 DECK


- OVERVIEW
- HOPPER & GRID
- SCREENBOX
- MAIN CONVEYOR
  - TAIL CONVEYOR
  - SIDE CONVEYORS
- POWER UNIT & HYDRAULICS
- TRACKS
- OPTIONS
  - OTHER OPTIONS
- POWERSCREEN® PULSE
- DIMENSIONS


# DIMENSIONS

**Figure 4: Chieftain 1700X 2 Deck**
**Double Deck Vibrating Grid**
**Transport Position**

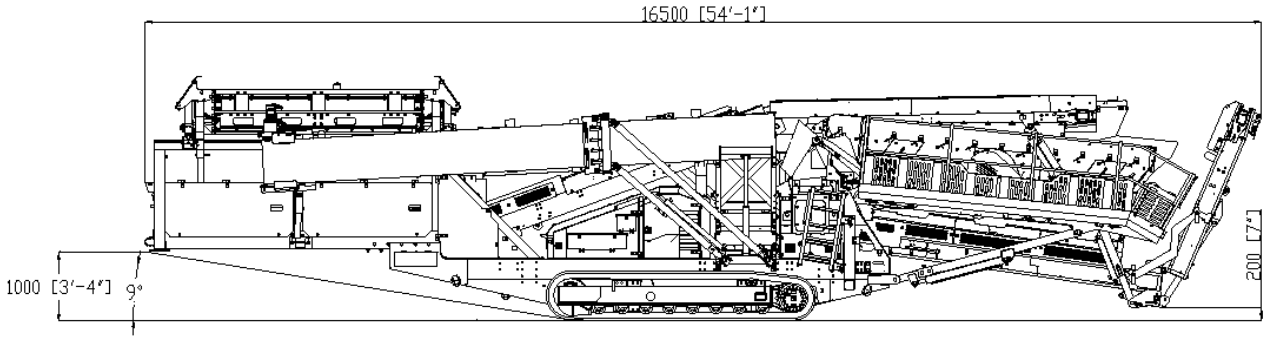


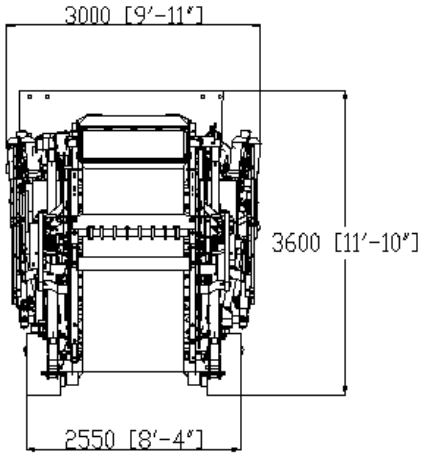

**Powerscreen equipment complies with CE requirements.**

Please consult Powerscreen if you have any other specific requirements in respect of guarding, noise or vibration levels, dust emissions, or any other factors relevant to health and safety measures or environmental protection needs. On receipt of specific requests, we will endeavour to ascertain the need for additional equipment and, if appropriate, quote extra to contract prices.

All reasonable steps have been taken to ensure the accuracy of this publication, however due to a policy of continual product development we reserve the right to change specifications without notice.

It is the importers' responsibility to check that all equipment supplied complies with local legislation regulatory requirements.

Plant performance figures given in this brochure are for illustration purposes only and will vary depending upon various factors, including feed material gradings and characteristics. Information relating to capacity or performance contained within this publication is not intended to be, nor will be, legally binding.

# GET IN TOUCH

**Dungannon**
200 Coalisland Road, Dungannon,
Co Tyrone, BT71 4DR, Northern Ireland
Tel: +44 (0) 28 87 718 500
Fax: +44 (0) 28 87 747 231

**Louisville**
11001 Electron Drive,
Louisville, Kentucky, 40299 USA
Tel: +1 502 736 5200
Fax: +1 502 736 5202

www.powerscreen.com