DEVELON

Articulated Dump Truck

DA45-7



Engine

Make	Scania
Model	DC13
Number of cylinders	6
Rated power, gross (hp per ISO 3046)	493.5 hp (368.0 kW) @ 2100 rpm
Rated power, net (hp per ISO 14396)	482.8 hp (360.0 kW) @ 2100 rpm
Max. torque, gross	1750.2 lbf·ft. (2373.0 Nm) @ 1300 rpm
Displacement	775.0 in.³ (12.7 L)
Bore and stroke	5.1" x 6.3" (130 mm x 160 mm)
Starter	24 V, 8.0 hp (6.0 kW)
Battery	2 x 12 V, 105 Ah
Alternator	24 V, 100 A
Air cleaner	Double elements

Hydraulics

Main pumps	77.7 gpm (294.0 L/min.)
Relief pressure (main)	4061.1 psi (280.0 bar)
Emergency steer pump	13.2 gpm (50.0 L/min.)
System pressure (steering)	3045.8 psi (210.0 bar)

Travel Speeds

Travel speed – forward (8)	3.7/5.6/7.5/10.6/14.9/21.1/29.8/34.2 mph (6.0/9.0/12.0/17.0/24.0/34.0/48.0/55.0 km/h)
Travel speed – reverse (4)	3.7/5.6/7.5/10.6 mph (6.0/9.0/12.0/17.0 km/h)

Environment

Sound level (ISO 6395)	104 dB(A)
Cabin sound level (ISO 6396)	70 dB(A)

Dump Body

Dump body volume (2:1)		34.1 yd³ (26.1 m³)
Dump body dumping time		Up: 10 sec / Down: 10 sec
Level capacity	**with tailgate**	26.8 yd³ (20.5 m³)
	without tailgate	25.9 yd³ (19.8 m³)
Heaped capacity	**with tailgate**	34.1 yd³ (26.1 m³)
	without tailgate	32.2 yd³ (24.6 m³)

Refill Capacities

Fuel tank	129.7 gal. (491.0 L)
DEF tank	18.5 gal. (70.0 L)
Cooling system (radiator capacity)	13.2 gal. (50.0 L)
Engine oil	11.9 gal. (45.0 L)
Transmission	18.2 gal. (69.0 L)
Front differential	2.5 gal. (9.4 L)
Rear differential	Included in tandem
Front hub (2)	2.5 gal. (9.6 L)
Tandem housing (2)	60.2 gal. (228.0 L)
Rear hub (4)	Included in tandem
Hydraulic tank	16.6 gal. (63.0 L)

All capacities are approximate values. Always refer to the machine's OM for exact refill levels. Check the dipstick, level eye, level plug, etc., to achieve the correct level.

Hydraulic Cylinders

Dump body tilt (2) bore x stroke	4.9" x 102.9" (125 mm x 2614 mm)
Steering (2) bore x stroke	4.5" x 21.7" (115 mm x 550 mm)

The piston rods and cylinder bodies are made of high-strength steel. A shock-absorbing mechanism is fitted in at the base and rod end of the lift and bucket cylinders and the rod end of the steering cylinders to ensure shock-free operation and extended piston life.

NOTE: Where applicable, dimensions are in accordance with Society of Automotive Engineers (SAE) and ISO standards. Specifications and design are subject to change without notice. All dimensions are given for DEVELON articulated dump trucks equipped with with standard radial 29.5 R25 tires. Pictures of DEVELON articulated dump trucks may show other than standard equipment. All dimensions are shown in inches. Respective metric dimensions are enclosed by parentheses. DEVELON equipment is manufactured with a Quality Management System that is in compliance with ISO 9001:2008.

Features

DA45-7

Suspension

- Front: semi-independent, self-leveling hydro-gas suspension
- Rear: free-swinging tandem housing

Brake System

- Dual circuit braking system acting on all six wheels
- Outboard hydraulic-operated brakes with enclosed, oil-cooled wet multiple discs on four hubs (braking force distributed to two hubs by tandem gear wheels)
- Spring-actuated hydraulic-released parking brake, mounted on driveline shaft
- Automatic hydrodynamic transmission retarder: 4 settings

Driveline

- Full-time 6×6 drive: two transverse differentials and one longitudinal
- Front axle transverse differential: limited-slip diff lock with 45% locking ratio
- Rear axle transverse differential: limited-slip diff lock with 40% locking ratio
- Inter-axle longitudinal differential:
  - Torque-proportioning differential: integrated into ZF transmission
  - Torque distribution: 1/3 to the front axle, 2/3 to the rear axle, 100% lockable
- Tandem housing: gear driven, free-swinging
  Provides equal drive to rear wheels and ensures the best possible ground contact — whatever the ground conditions.
- Ample ground clearance at articulation hinge (2' 4.3")

Articulation Hinge and Steering

- Articulation hinge with forward-mounted turning ring
- Steering cylinders (two): double-acting
- Maximum steering angle: 45°
- Ground-driven emergency steering pump

Cab

Comfort

- Cab centrally located on rubber mountings
- Ergonomic operating controls location
- Pressurized and sealed cab
- Climate control: heater and air conditioning
- Adjustable heated air-suspension seat
- Adjustable steering column
- Standard radio supports MP3, digital audio and Bluetooth® wireless technology
- 12 V power source and spacious storage department
- USB port

Safety & Visibility

- Approved to ROPS/FOPS standards (ISO 3471/ISO 3449)
- Low interior sound level: 70 dB(A) (ISO 6396)
- External sound level: 104 dB(A) (ISO 6395)
- Superior visibility for safer operation
- Adjustable heated mirrors
- All-around handrails
- Front entry to cab
- Ground level fluid fill points and site gauges

Serviceability

- Tilting cab for service access
- Grouped hydraulic test ports

- No diesel particulate filter (DPF) required



- Automatic central lubrication system
- Bed heater keeps material from sticking to body

Dimensions

		DA45-7
Gross weight		156306 lb. (70900 kg)
Net weight		65918 lb. (29900 kg)
Payload		90389 lb. (41000 kg)
Empty weight distribution	front axle	33951 lb. (15400 kg)
	rear axle	31967 lb. (14500 kg)
	front/rear	51.5%/48.5%
Loaded weight distribution	front axle	48455 lb. (21979 kg)
	rear axle	107851 lb. (48921 kg)
	front/rear	31.0%/69.0%

Turning radius according to ISO 7457 (center of outer wheel):
27' 11.5" (8521 mm)

A = 14' 1.4" (4305 mm)
B = 29' 4.6" (8956 mm)
C = 19' 4.8" (5912 mm)

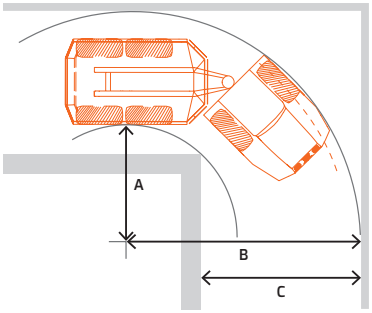

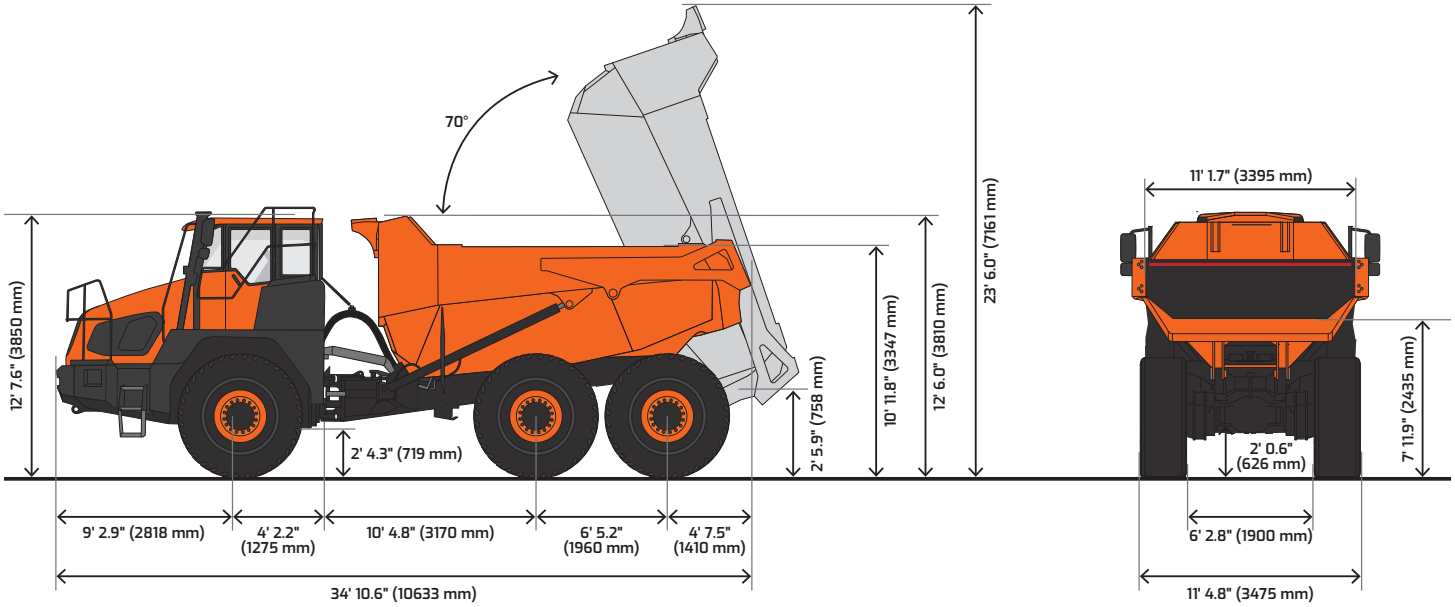

Standard & Optional Equipment

● Standard ● Optional

Engine

Emissions (EPA), T4f	■
High-pressure common-rail (HPCR)	■
Cooled exhaust gas recirculation (CEGR)	■
Selective catalyst reduction (SCR)	■
Diesel exhaust fluid (DEF)	■
Fuel filter with water separator	■
Coolant recovery tank	■
Dual element dry-type air filter with evacuator	■
Electronic engine control (ECU)	■
Cool-down mode	■
Diesel engine heater	●

Hydraulic

Variable displacement axial piston pump	■
Cooling fan – hydraulic, variable speed	■
Emergency steering pump (ground driven)	■

Electrical

System voltage – 24 V	■
Alternator – 24 V, 100 A	■
2 x 12 V batteries, 105 Ah reserve capacity	■
Electronic fuses	■
Lights, work (halogen): front & rear	●
Lights, work (LED): front & rear	●
Lights, stop, tail & direction indicators	■
Rotating beacon	●
Hour meter	■
Rearview camera	■
Laptop service port	■
Self-diagnostics system	■
Emergency shutdown switch	■

Controls

Adjustable steering column - Tilting - Telescoping	■
Throttle pedal (accelerator)	■
Brake pedal	■
Gear selector ("trip-tonic")	■
Electronic body hoist lever	■
Adjustable hydrodynamic retarder lever	■
Switches, console-mounted - Key switch - Parking brake with auto-hold function	■
Buttons & indicator lights, keypad - Parking lights - Main lights - Engine pre-heater - Hazard lights - Rear axle differential lock - Inter-axle differential lock - Retarder control - Filter heater - Heated seat - Heated mirrors - Rear work lights - Rotating beacon - Work lights - Interior cabin light	■

Cabin

Steel, all-weather & sound-suppressed	■
ROPS (ISO 3471)	■
FOPS (ISO 3449)	■
Front window with wiper/washer	■
Rear window	■
Tinted safety glass	■
Visor, retractable	■
Adjustable sliding side window	■
Lockable doors	■
Seat - Heated - Air suspension - 2" (51 mm) seat belt - Adjustable height & recline - Adjustable fore/aft - Adjustable armrests	■
Instructor's seat, folding	■
Storage for operator's manuals	■
Mirrors (2), exterior front-mounted	■
Mirrors (2), exterior side-mounted, adjustable & heated	■
Smart Touch display - Touch-enabled - Adjustable height & angle	■
Cigarette lighter	■
AM/FM stereo & Bluetooth®	■
Speakers (2)	■
Antenna	■
Space for cooler box	■
Storage	■
Power socket, 12 V, USB power outlet	■
Cup holder	■
Interior light	■
Guard, rear window	■
Cab tiliting system	■

Display Monitor & Warnings

Buzzer - Brake system - Parking brake	■
Gauges - Fuel level - DEF level - Engine coolant temperature - Transmission oil temperature - Retarder oil temperature - Payload meter - Gradient meter - Engine rpm - Speedometer - Transmission gear indicator - Battery voltage - Digital clock - Trip meter - Hour meter - Fuel consumption	■
Warning & indicator lights - Seat belt - Error code - SCR warning - Check engine - Engine oil pressure - Engine pre-heat engaged - Radiator coolant level & temperature - Air filter - Fuel level - DEF level - Lights (high, main, work, beacon) - Direction signal - Emergency steering - Transmission mode - Transmission lock-up - Transmission oil temp - Transmission gear indicator - Retarder oil temperature - Retarder brake - Lubrication system - Body down - Parking brake indicator - Payload indicator	■
Payload indicator, external	■
Fully adjustable HVAC	■

Frame & Suspension

Articulation hinge	■
Steering cylinder, double-acting (2)	■
Turning ring, forward-mounted	■
Towing hook, front & rear	■
Sloping rear frame	■
Front – semi-independent, self-leveling hydro-gas suspension	■
Rear – free-swinging tandem housing	■
Tires, radial 29.5 R25	■

Driveline

Transmission, automatic – electronic shift control	■
Torque converter lock-up clutch	■
6x6 drive, full-time	■
Front axle transverse differential: limited-slip diff lock with 45% locking ratio	■
Rear axle transverse differential (1): limited-slip diff lock with 40% locking ratio	■
Inter-axle longitudinal differential - Torque-proportioning differential: integrated into ZF transmission - Torque distribution: 1/3 to front axle, 2/3 to rear axle, 100% lockable	■
Tandem housing – gear driven, free-swinging	■
Automatic hydrodynamic transmission retarder, 4 settings	■
Braking system, dual circuit	■
Hydraulic, wet multiple discs – 4 (front & mid wheels)	■
Parking brake, spring-applied hydraulic release – driveshaft mounted	■

Body

Body, high-tensile Hb400 steel	■
Lifting cylinder, double-acting (2) – cushion, extending	■
Tailgate, scissor type	■
Spill guard on front of body	■
Bed heating system	■
Body lining	●

Other

Automatic lubrication system	■
Handrails & service steps	■
Skid-resistant steps & service platforms	■
Body lift support	■
Fire extinguisher	●
First aid kit	●
Manuals - Operation & Maintenance - AEM Safety Manual	■
MY DEVELON (telematics)	■
Vandalism protection - Lockable panels - Lockable fluid fill points	■
Mud flaps	■

Certain specification(s) are based on engineering calculations and are not actual measurements. Specification(s) are provided for comparison purposes only and are subject to change without notice. Specification(s) for your individual DEVELON equipment will vary based on normal variations in design, manufacturing, operating conditions, and other factors. Pictures of DEVELON units may show other than standard equipment.

Powered by **Innovation**

na.develon-ce.com/da45-7

DA45-7 Articulated Dump Truck Spec Sheet
Printed in the U.S.A.
26909_002_D102926

DEVELON

A brand of HD Construction Equipment.

©2026 HD Construction Equipment
Develon North America. All rights reserved.