POWERSCREEN®
GLADIATOR MT1150SR

WHEELED ELECTRIC UNIT

GET STARTED



MADE IN THE USA

TECHNICAL SPECIFICATION - REV 0 01/10/2020

To use my interactive features I need to be opened in 'Adobe Acrobat Reader' click here to download



GLADIATOR MT1150SR

- OVERVIEW
- CONE CRUSHER
- SCREENBOX
- DISCHARGE CONVEYOR
- OVER SCREEN CONVEYOR
- UNDER CRUSHER CONVEYOR
- CROSS CONVEYOR
- CHUTES
- BOGIE
- OTHER
- OPTIONS
- DIMENSIONS

OVERVIEW

SPECIFICATION

Transport	**Length**	62' 4'' (19.56m)
	Height	13' 11.5'' (4.25m)
	Width	12' 9.5'' (3.89m)
Working	**Length**	62' 4'' (19.56m)
	Height	15' (4.57m)
	Width	12' 9.5'' (3.89m)

Plant Colour RAL 5021, RAL 7024

Total Weight: 115,000lbs (52,163kg)
Axle Load: 64,500lbs (29,257kg)
King Pin Load: 55,000lbs (24,948kg)

The Powerscreen Gladiator MT1150SR is a wheeled, electric drive closed circuit cone crushing / screening plant. This closed circuit crushing and screening plant incorporates the tried and tested TC1150 cone crushing chamber coupled with the 20' x 6' H6203 Horizontal screenbox for recirculation.

FEATURES & BENEFITS

- Output potential of up to 450 tph / 496 US tph - depending on material type and crusher settings.
- Accepts clean 'all in feed'.
- Excellent product shape.
- High reduction ratio.
- Metal detector as standard
- Access ladders on both sides to access the upper deck.
- E-Stops on both sides of the unit.

APPLICATIONS

Aggregate
Sand & gravel
Blasted rock
River rock

Recycling
Top soil
C&D waste
Composed materials
Wood by-products
Overburden
Foundry waste

Mining
Processed ores
Processed minerals



GLADIATOR MT1150SR

- OVERVIEW
- CONE CRUSHER
- SCREENBOX
- DISCHARGE CONVEYOR
- OVER SCREEN CONVEYOR
- UNDER CRUSHER CONVEYOR
- CROSS CONVEYOR
- CHUTES
- BOGIE
- OTHER
- OPTIONS
- DIMENSIONS

CONE CRUSHER

Crusher type: 1150 Automax® crusher fitted as standard with long throw eccentric

Liners: Manganese steel alloy mantle & concave

Standard concave: Medium Coarse (MC)

Lubrication: Pumped system having a chassis mounted lube tank with air blast cooler

Adjustment: Hydraulic setting adjustment, automatic overload release & hydraulic unblocking

Control: 2 Operating modes available:

- Autoset Mode: fixed parameters
- Maxset Mode: load sensing, parameters auto adjust & maximise performance. Variable speed.

Concave options: Extra Coarse (XC)
Fine (F)
Common upper frame for all liners

Mounted: Mounted on 4 x isolators

Drive: 300hp (224kW) WEG electric motor @1800rpm

CRUSHER OPTIONS

LINER PROFILE	MAXIMUM FEED SIZE	MAXIMUM RECOMMENDED CSS
Fine	120mm (4.7”)	32mm (1.26”)
Medium Course	190mm (7.5”)	38mm (1.6”)
Extra Coarse	220mm (8.7”)	45mm (1.8”)





GLADIATOR MT1150SR

- OVERVIEW
- CONE CRUSHER
- SCREENBOX
- DISCHARGE CONVEYOR
- OVER SCREEN CONVEYOR
- UNDER CRUSHER CONVEYOR
- CROSS CONVEYOR
- CHUTES
- BOGIE
- OTHER
- OPTIONS
- DIMENSIONS

SCREENBOX

6.1m x 1.93m (20' x 6' 4") (All 3 decks)
3 deck triple shaft horizontal screenbox
Oval stroke adjustable up to maximum of 19mm
Oval stroke angle adjustable from 30º - 60º

Breaker-box with wear resistant steel replaceable wearplate
Hi-torque screen motor mounted direct to
Screenbox, pulley driven
Steel springs
Wear plates on pipeunits

Side tensioned all decks
Quick release wedge tensioning system
(optional depending on screen media)

40hp (30kW), 1800rpm screen motor

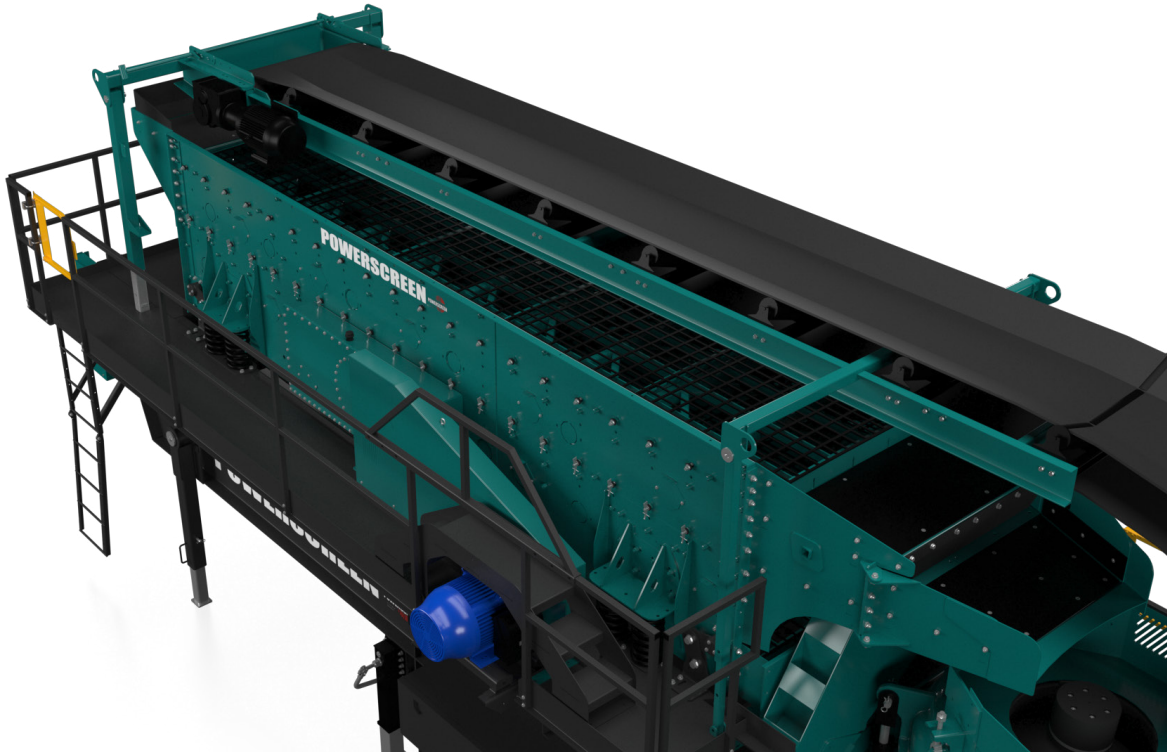



GLADIATOR MT1150SR

- OVERVIEW
- CONE CRUSHER
- SCREENBOX
- DISCHARGE CONVEYOR
- OVER SCREEN CONVEYOR
- UNDER CRUSHER CONVEYOR
- CROSS CONVEYOR
- CHUTES
- BOGIE
- OTHER
- OPTIONS
- DIMENSIONS

DISCHARGE CONVEYOR

Belt Width: 54'' (1370mm)
Belt Type: Plain
Belt Spec: 3 ply 3/16'' x 1/16''
Max Speed: 350 ff/min (107 m/min)
Discharge Height: 4' 5'' (1.35m)
Stockpile Capacity: 4.8 yd^3 (3.7m^3)
Motor: 10hp (7.5kW)
Flexco TM scraper

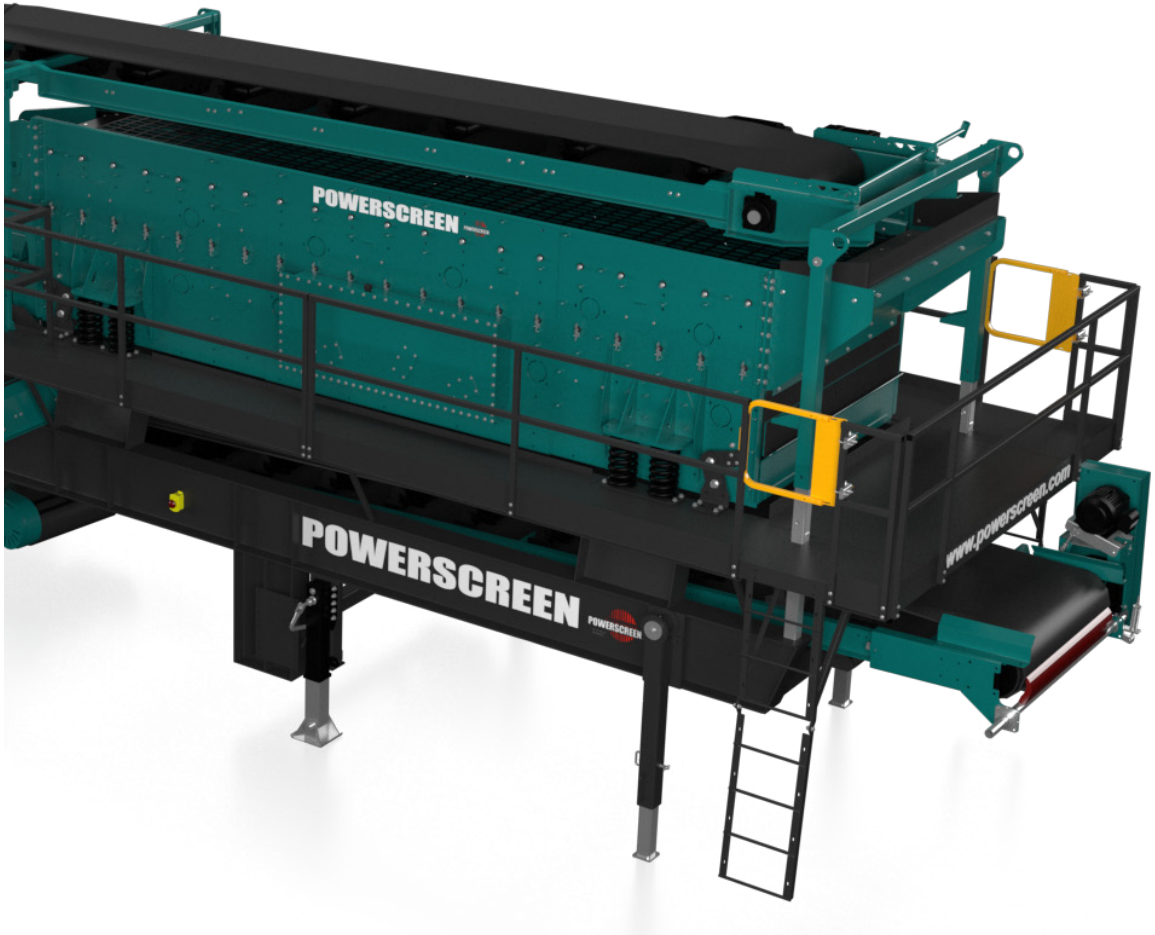



GLADIATOR MT1150SR

- OVERVIEW
- CONE CRUSHER
- SCREENBOX
- DISCHARGE CONVEYOR
- OVER SCREEN CONVEYOR
- UNDER CRUSHER CONVEYOR
- CROSS CONVEYOR
- CHUTES
- BOGIE
- OTHER
- OPTIONS
- DIMENSIONS

OVER SCREEN CONVEYOR

Belt Width: 42'' (1060mm)
Belt Type: Plain
Belt Spec: 3 ply 3/16'' x 1/16''
Max Speed: 350 ff/min (107 m/min)
Motor: 20hp (15kW) WEG

Conveyor is manually raised and lowered for transport - lifting and bottle jack points are included.
There is an intentional break in the conveyor to aid easy Cone mantle change.

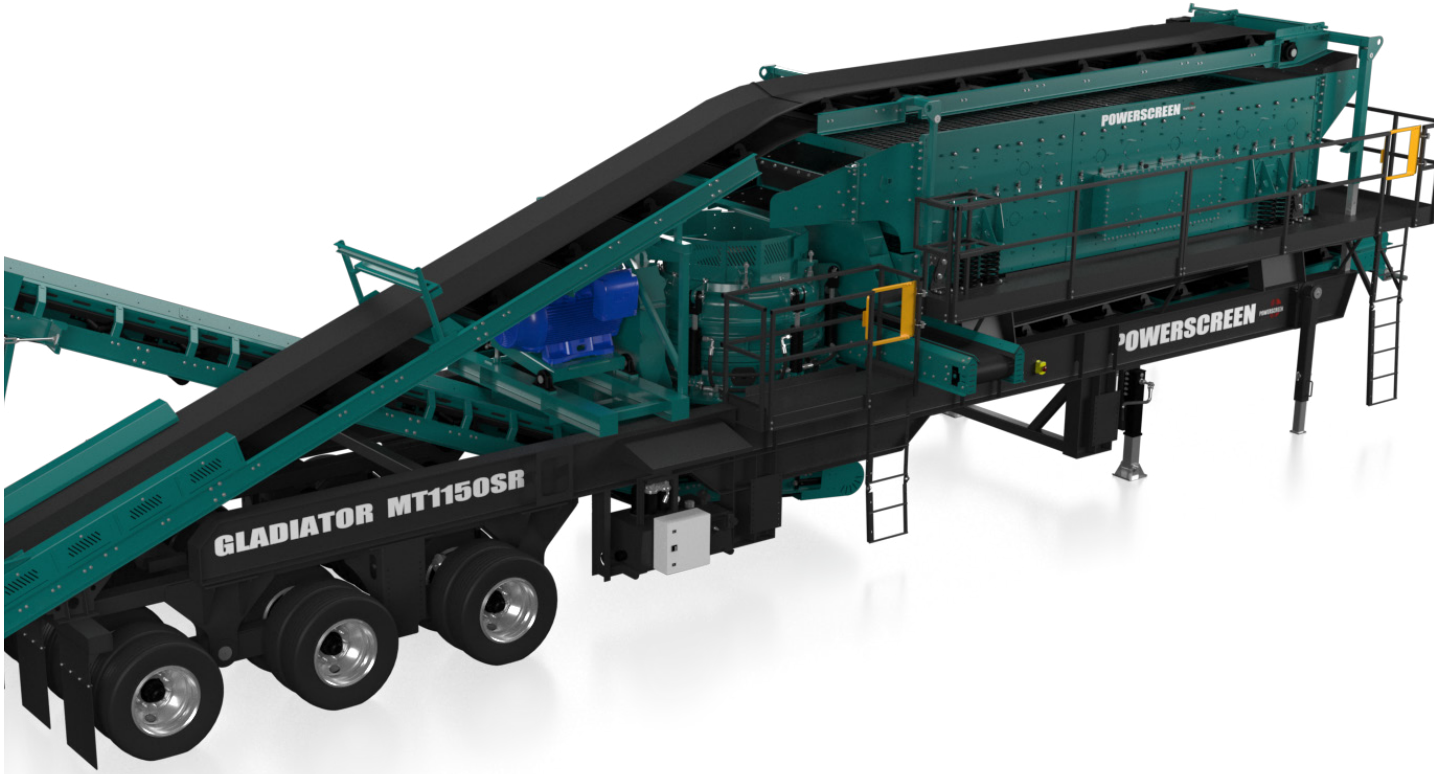



GLADIATOR MT1150SR

- OVERVIEW
- CONE CRUSHER
- SCREENBOX
- DISCHARGE CONVEYOR
- OVER SCREEN CONVEYOR
- UNDER CRUSHER CONVEYOR
- CROSS CONVEYOR
- CHUTES
- BOGIE
- OTHER
- OPTIONS
- DIMENSIONS

UNDER CRUSHER CONVEYOR

Belt Width: 36'' (915mm)
Belt Type: Plain
Belt Spec: 3 ply 3/16'' x 1/16''
Max Speed: 350 ff/min (107 m/min)
Motor: 10hp (7.5kW) WEG
Conveyor is fully skirted.





GLADIATOR MT1150SR

- OVERVIEW
- CONE CRUSHER
- SCREENBOX
- DISCHARGE CONVEYOR
- OVER SCREEN CONVEYOR
- UNDER CRUSHER CONVEYOR
- CROSS CONVEYOR
- CHUTES
- BOGIE
- OTHER
- OPTIONS
- DIMENSIONS

CROSS CONVEYOR

Belt Width: 24'' (610mm)
Belt Type: Plain
Max Speed: 350 ff/min (110 m/min)
Motor: 5hp





GLADIATOR MT1150SR

- OVERVIEW
- CONE CRUSHER
- SCREENBOX
- DISCHARGE CONVEYOR
- OVER SCREEN CONVEYOR
- UNDER CRUSHER CONVEYOR
- CROSS CONVEYOR
- CHUTES
- BOGIE
- OTHER
- OPTIONS
- DIMENSIONS

CHUTES

RETURN CHUTE

Fabricated from 3/16'' mild steel.

Keyed liners made from 3/8'' AR.

Reversible to discharge to feed conveyor or to the outside of the plant.

OVERFLOW CHUTE

Discharges to under crusher conveyor.

MIDDLE DECK CHUTES

Keyed 3/8'' AR liners

Can discharge to either side





GLADIATOR MT1150SR

- OVERVIEW
- CONE CRUSHER
- SCREENBOX
- DISCHARGE CONVEYOR
- OVER SCREEN CONVEYOR
- UNDER CRUSHER CONVEYOR
- CROSS CONVEYOR
- CHUTES
- BOGIE
- OTHER
- OPTIONS
- DIMENSIONS

BOGIE

Type: Triple trunnion axle - sprung suspension
Size: 24 no. 11R X 22.5
No of Axles: 3
No of Studs: 10
Brakes: Spring applied air brakes





GLADIATOR MT1150SR

- OVERVIEW
- CONE CRUSHER
- SCREENBOX
- DISCHARGE CONVEYOR
- OVER SCREEN CONVEYOR
- UNDER CRUSHER CONVEYOR
- CROSS CONVEYOR
- CHUTES
- BOGIE
- OTHER
- OPTIONS
- DIMENSIONS

OTHER

EXTERNAL POWER REQUIREMENTS

460V
3 Phase
60 Hz

	Power
Cone	300hp (224kW)
Screenbox	40hp (30kW)
Discharge Conveyor	10hp (7.5kW)
Over Screen Conveyor	20hp (15kW)
Under Crusher Conveyor	10hp (7.5kW)
Cross Conveyor	5hp (3.7kW)
Optional Magnet	2hp (1.5kW)
Total Power Required	387hp (290kW)

CONTROL SYSTEM

Manual push button
Electrical option

SCREEN CHUTE

Top deck to cone
Middle deck to cone or chutes via removable doors
Chute is hunged to allow access to cone for mantle change

PLATFORMS

Self closing gates x 2
Fabricated ladders x 2
Fabricated from 3/16'' diamond plate
Cone maintenance platform

UNDER SCREEN HOPPER

Fabricated from 3/16'' mild steel

LANDING JACKS

2 x crank down landing jacks





GLADIATOR MT1150SR

- OVERVIEW
- CONE CRUSHER
- SCREENBOX
- DISCHARGE CONVEYOR
- OVER SCREEN CONVEYOR
- UNDER CRUSHER CONVEYOR
- CROSS CONVEYOR
- CHUTES
- BOGIE
- OTHER
- OPTIONS
- DIMENSIONS

OPTIONS

- Manual button switchgear panel
- 100ft lead cord
- 4 no of 6'' x 16'' levelling hydraulic jacks with 13hp Honda power unit
- 6 no of 6'' x 24'' run on hydraulic jacks with 13hp Honda power unit
- Magnet - Eriez TP25/100 Twin Pole self cleaning

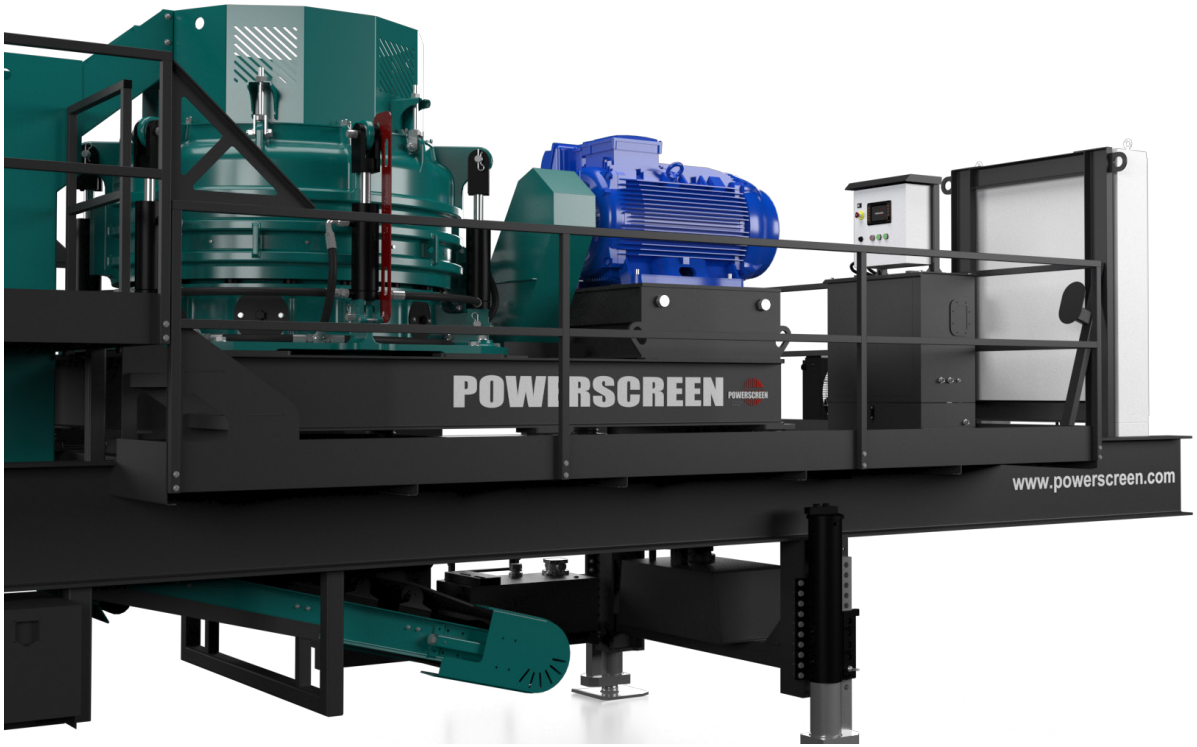



GLADIATOR MT1150SR

- OVERVIEW
- CONE CRUSHER
- SCREENBOX
- DISCHARGE CONVEYOR
- OVER SCREEN CONVEYOR
- UNDER CRUSHER CONVEYOR
- CROSS CONVEYOR
- CHUTES
- BOGIE
- OTHER
- OPTIONS
- DIMENSIONS

DIMENSIONS

Figure 1: Gladiator MT1150SR
Working Position

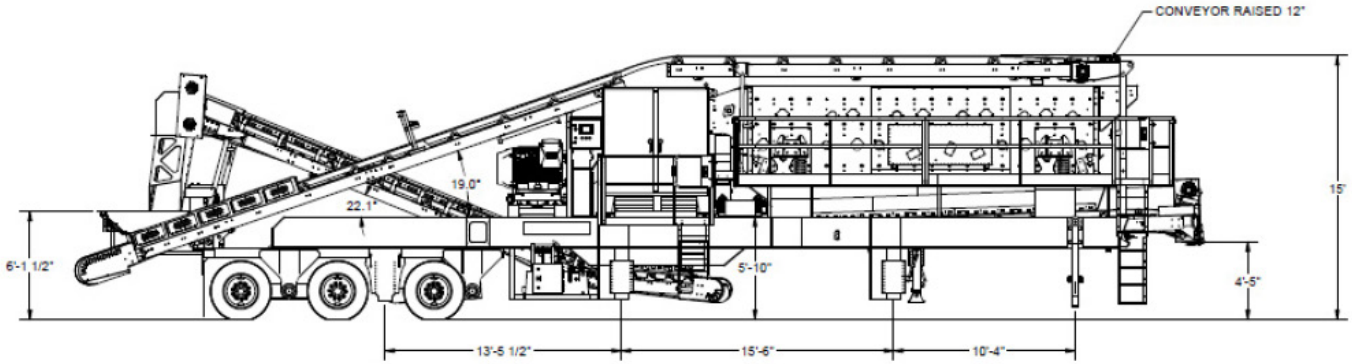

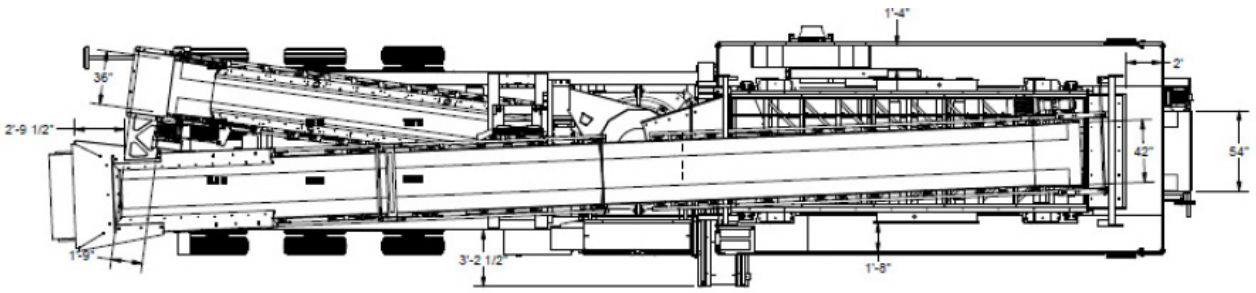

MORE DIMENSIONS OVERLEAF



GLADIATOR MT1150SR

- OVERVIEW
- CONE CRUSHER
- SCREENBOX
- DISCHARGE CONVEYOR
- OVER SCREEN CONVEYOR
- UNDER CRUSHER CONVEYOR
- CROSS CONVEYOR
- CHUTES
- BOGIE
- OTHER
- OPTIONS
- DIMENSIONS

DIMENSIONS

Figure 2: Gladiator MT1150SR
Transport Position

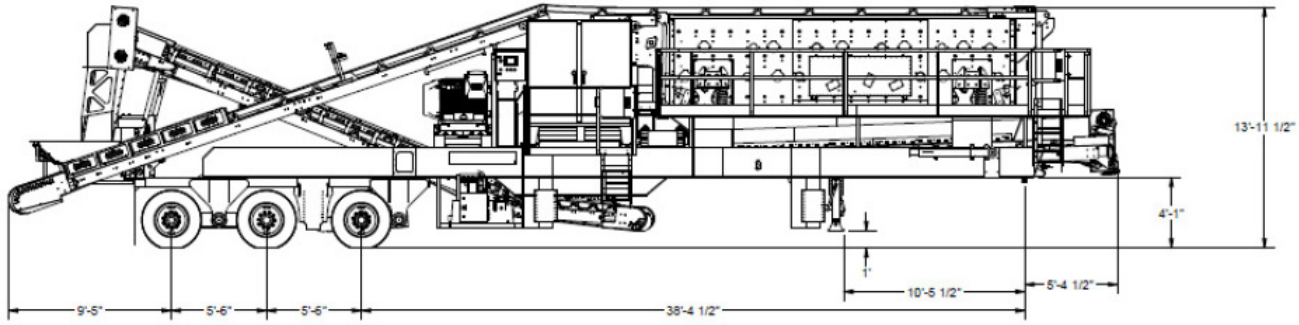

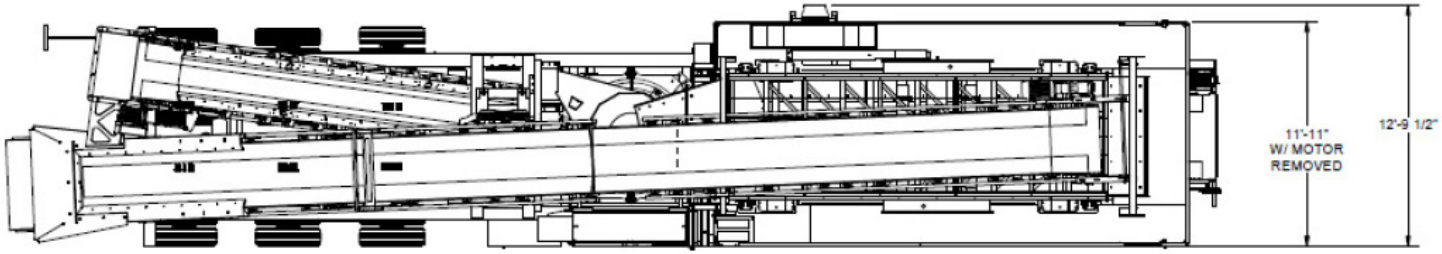

Please consult Powerscreen if you have any other specific requirements in respect of guarding, noise or vibration levels, dust emissions, or any other factors relevant to health and safety measures or environmental protection needs. On receipt of specific requests, we will endeavour to ascertain the need for additional equipment and, if appropriate, quote extra to contract prices.

All reasonable steps have been taken to ensure the accuracy of this publication, however due to a policy of continual product development we reserve the right to change specifications without notice.

It is the importers' responsibility to check that all equipment supplied complies with local legislation regulatory requirements.

Plant performance figures given in this brochure are for illustration purposes only and will vary depending upon various factors, including feed material gradings and characteristics. Information relating to capacity or performance contained within this publication is not intended to be, nor will be, legally binding.

GET IN TOUCH

Dungannon
200 Coalisland Road, Dungannon,
Co Tyrone, BT71 4DR, Northern Ireland
Tel: +44 (0) 28 87 718 500
Fax: +44 (0) 28 87 747 231

Louisville
11001 Electron Drive,
Louisville, Kentucky, 40299 USA
Tel: +1 502 736 5200
Fax: +1 502 736 5202

www.powerscreen.com