POWERSCREEN®
GLADIATOR PT600

PORTABLE ELECTRIC JAW CRUSHING PLANT

GET STARTED



MADE IN THE USA

TECHNICAL SPECIFICATION - REV 0. 01/03/2023

To use my interactive features I need to be opened in 'Adobe Acrobat Reader' click here to download



GLADIATOR PT600

- OVERVIEW
- JAW CRUSHER
- VGF & HOPPER
- HOPPER & CHUTE
- DISCHARGE CONVEYOR
- BOGIE
- OTHER
- OPTIONS
- DIMENSIONS

OVERVIEW

SPECIFICATION

Transport	**Length**	55' 1" (16.78m)
	Height	13' 6'' (4.12m)
	Width	11' 10'' (3.62m)
Working	**Length**	55' 1" (16.78m)
	Height	16' 1" (4.91m) - With optional run on jacks extended
	Width	11' 10'' (3.62m)
Plant Colour		RAL 5021, RAL 7024
Total Weight:		113,027lbs (60,340kg)
Axle Load:		77,721lbs (35,254kg)
King Pin Load:		55,306lbs (25,086kg)

Weights and measurements dependent on options

FEATURES & BENEFITS

- Output potential of up to 661 US tph / 600 tph - depending on material type and crusher settings.
- The electrically driven power system provides significant cost savings.
- Superior performance in dusty applications and in high altitude environments.
- The high powered electric drive ensures precise chamber control and reverse functionality for clearing blockages - also proving adventageous in recycling and demolition applications.
- Access platforms around 3 sides of the chamber.
- E-Stops on both sides of the unit.
- The optional twin pole magnet has a reversible discharge chute.

APPLICATIONS

Aggregate
Sand & gravel
Blasted rock
River rock

Recycling
Top soil
C&D waste
Composed materials
Wood by-products
Overburden
Foundry waste

Mining
Processed ores
Processed minerals



GLADIATOR PT600

- OVERVIEW
- JAW CRUSHER
- VGF & HOPPER
- HOPPER & CHUTE
- DISCHARGE CONVEYOR
- BOGIE
- OTHER
- OPTIONS
- DIMENSIONS

JAW CRUSHER

Crusher Type: Single toggle jaw with hydraulic setting adjustment
Feed Opening: 47'' x 32'' (1200mm x 820mm)
Lubrication: Grease
Drive: 200hp (150kW) electric motor @ 1200rpm
Max CSS: 8'' (200mm) - subject to toggle selection
Min CSS: 3'' (75mm) - hard rock quarry applications

S-Tooth (18% Manganese) fitted as standard.
CSS adjustment via hudraulic power unit (wedge adjust).





GLADIATOR PT600

- OVERVIEW
- JAW CRUSHER
- VGF & HOPPER
- HOPPER & CHUTE
- DISCHARGE CONVEYOR
- BOGIE
- OTHER
- OPTIONS
- DIMENSIONS

VGF & HOPPER

Length: 20' (6.096m)
Width: 4' 4'' (1.32m)
Capacity: 10.3 yd^3 (7.8m^3)
Feed in Height Side: 15' 3'' (4.64m)
Feed in Height Rear: 15' 3'' (4.64m)
Motor: 40hp (30kW) @ 1200rpm
Hopper Fabricated: 3/4'' (20mm) AR400 steel
Available Grizzlys: 2'' (51mm) nominal opening with 9 grizzly bars
$2^{1/2}$'' (64mm) nominal opening with 8 grizzly bars
$3^{1/2}$'' (89mm) nominal opening with 7 grizzly bars
4'' (100mm) nominal opening with 6 grizzly bars - **Standard**
$5^{1/2}$'' (125mm) nominal opening with 5 grizzly bars

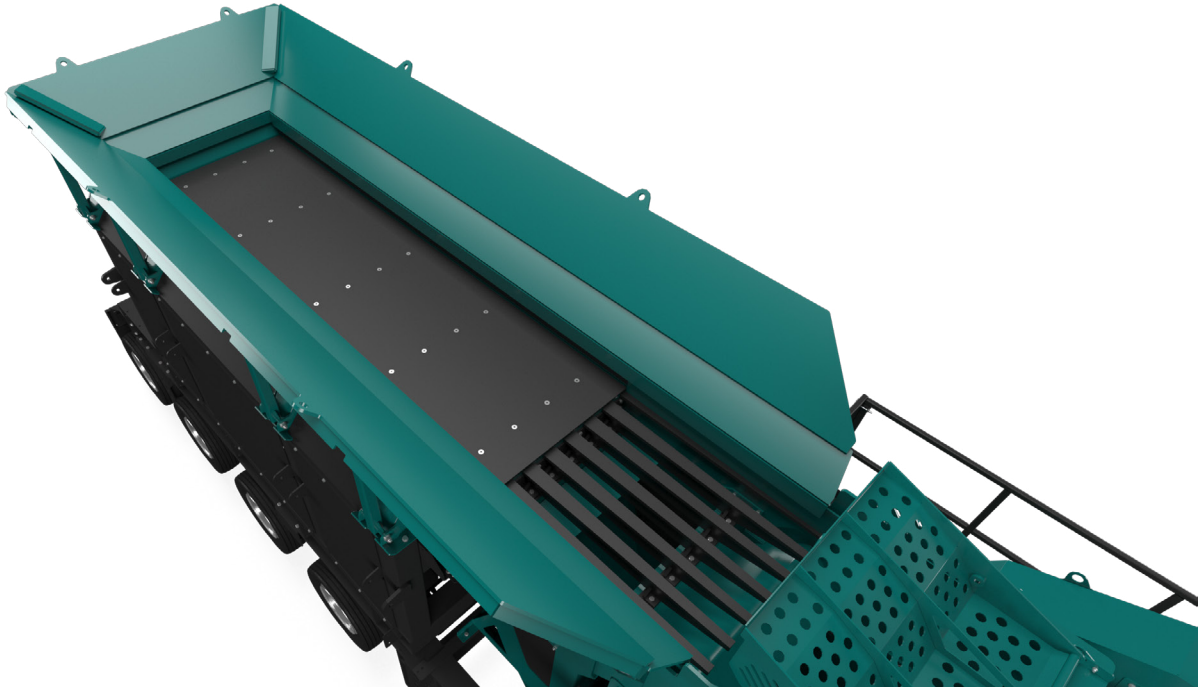



GLADIATOR PT600

- OVERVIEW
- JAW CRUSHER
- VGF & HOPPER
- HOPPER & CHUTE
- DISCHARGE CONVEYOR
- BOGIE
- OTHER
- OPTIONS
- DIMENSIONS

UNDER CRUSHER HOPPER & BYPASS CHUTE

UNDER CRUSHER HOPPER

Manufactured from 6mm (1/4'') mild steel.
Rock ledge with AR400 10mm (3/8'') liners.
Rubber flashing.
Access hatches both sides to aid CSS adjustment.

BYPASS CHUTE

Manufactured from 10mm (3/8'') & 6mm (1/4'') mild steel.
Access hatches both sides for chute access.
Internal openings for crusher serviceability.

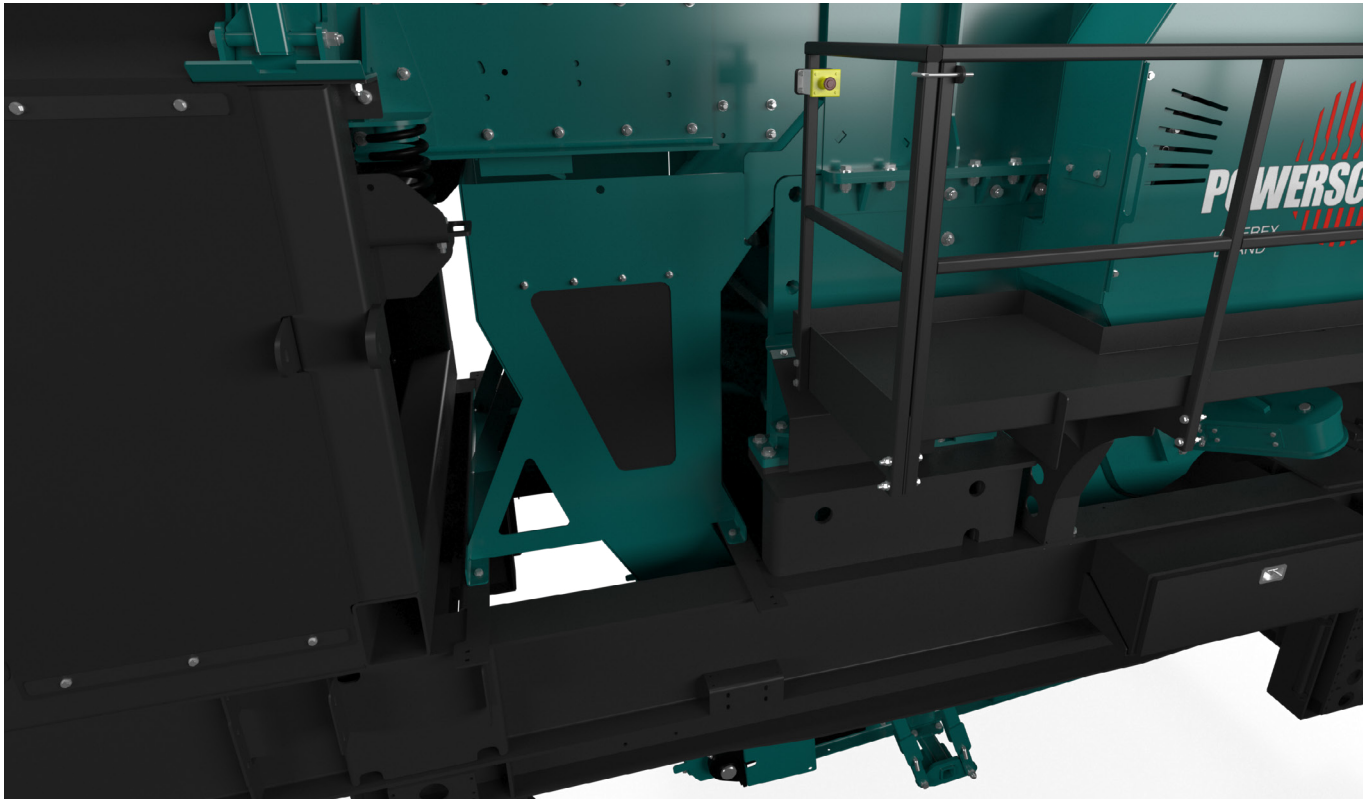



GLADIATOR PT600

- OVERVIEW
- JAW CRUSHER
- VGF & HOPPER
- HOPPER & CHUTE
- DISCHARGE CONVEYOR
- BOGIE
- OTHER
- OPTIONS
- DIMENSIONS

DISCHARGE CONVEYOR

Belt Width: 54'' (1372mm)
Drum Centes: 30' 2'' (9195mm)
Belt Type: Plain
Belt Spec: 3 Ply 330 PIW
Max Speed: 300 ff/min (91 m/min)
Discharge Height: 8' 6'' (2.6m)
Stockpile Capacity: 34 yd^3 (26m^3)
Motor: 25hp (18.65kW)
Fixed angle
Flexco scraper





GLADIATOR PT600

- OVERVIEW
- JAW CRUSHER
- VGF & HOPPER
- HOPPER & CHUTE
- DISCHARGE CONVEYOR
- BOGIE
- OTHER
- OPTIONS
- DIMENSIONS

BOGIE

Type: Heavy duty sprung quad axle
Size: 16 of 295/75 R22.5 radial tyres
No of Axles: 4
No of Studs: 10
Brakes: Air





GLADIATOR PT600

- OVERVIEW
- JAW CRUSHER
- VGF & HOPPER
- HOPPER & CHUTE
- DISCHARGE CONVEYOR
- BOGIE
- OTHER
- OPTIONS
- DIMENSIONS

OTHER

EXTERNAL POWER REQUIREMENTS

460V (575V Option if required)
3 Phase
60 Hz

	Power
Jaw	200hp (150kW)
Discharge Conveyor	25hp (18.5kW)
VGF	40hp (30kW)
Optional Byass Conveyor	7.5hp (5.5kW)
Optional Magnet	2hp (1.5kW)
Total Power Required	274.5hp (205.5kW)

TOOLBOX

48'' (1200mm) long
Lockable lid
RHS of plant

JACKING LEGS

Hand crank jacks.

PLATFORMS

Fabricated folding access ladder x 2
Self closing gates x 2
Diamond deck platform on both sides of the jaw
Access to 3 sides of the jaw chamber.





GLADIATOR PT600

- OVERVIEW
- JAW CRUSHER
- VGF & HOPPER
- HOPPER & CHUTE
- DISCHARGE CONVEYOR
- BOGIE
- OTHER
- OPTIONS
- DIMENSIONS

OPTIONS

- Manual button switchgear panel
- 100ft lead cord - to connect panel to power source
- 4 no of 6'' x 16'' levelling hydraulic jacks with 13hp Honda powerunit
- 6 no of 6'' x 24'' run on hydraulic jacks 13hp Honda power unit
- TP20/100 SC2ATwin pole magnet
- Various grizzly bar spacings
- 30'' bypass conveyor complete with bypass chute
- Removable side and under guarding
- Multiple axle confiurations to meet a variety of road regulations





GLADIATOR PT600

- OVERVIEW
- JAW CRUSHER
- VGF & HOPPER
- HOPPER & CHUTE
- DISCHARGE CONVEYOR
- BOGIE
- OTHER
- OPTIONS
- DIMENSIONS

DIMENSIONS

Figure 1: Gladiator PT600
Working Position Showing Quad Axle

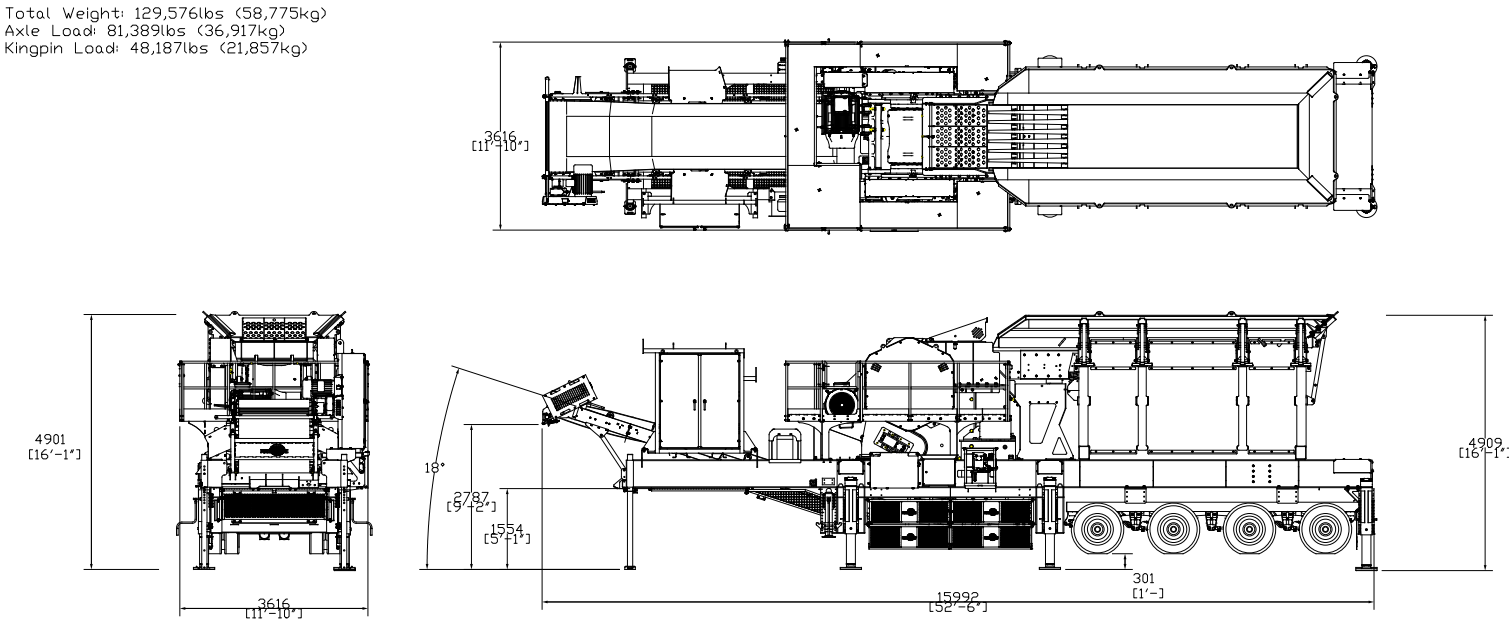

Total Weight:	129,576lbs (58,775kg)
Axle Load:	81,389lbs (36,917kg)
King Pin Load:	48,187lbs (21,857kg)

Weights and measurements dependent on options

MORE DIMENSIONS OVERLEAF



GLADIATOR PT600

- OVERVIEW
- JAW CRUSHER
- VGF & HOPPER
- HOPPER & CHUTE
- DISCHARGE CONVEYOR
- BOGIE
- OTHER
- OPTIONS
- DIMENSIONS

DIMENSIONS

Figure 2: Gladiator PT600
Transport Position Showing Quad Axle

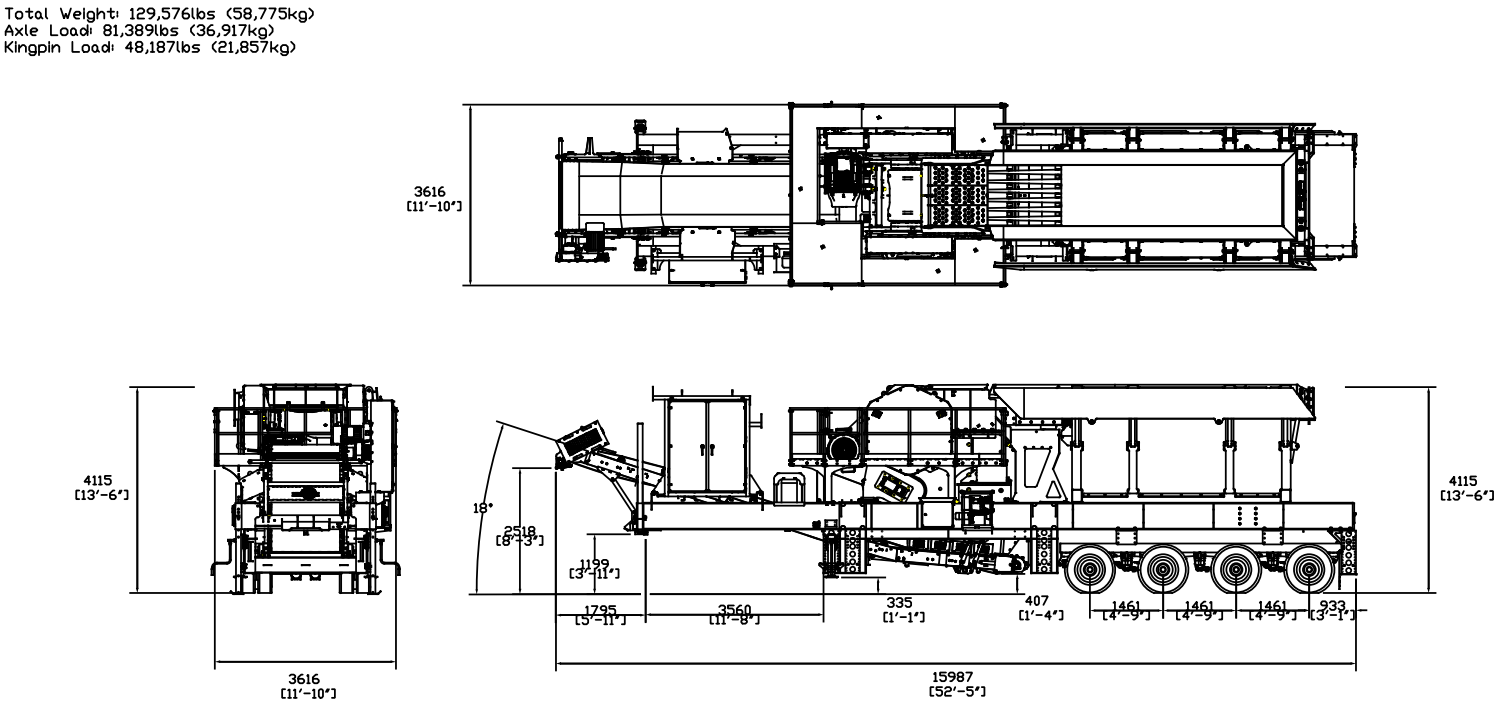

Total Weight:	129,576lbs (58,775kg)
Axle Load:	81,389lbs (36,917kg)
King Pin Load:	48,187lbs (21,857kg)

Weights and measurements dependent on options



GLADIATOR PT600

- OVERVIEW
- JAW CRUSHER
- VGF & HOPPER
- HOPPER & CHUTE
- DISCHARGE CONVEYOR
- BOGIE
- OTHER
- OPTIONS
- DIMENSIONS

DIMENSIONS

Figure 3: Gladiator PT600
Transport Position Showing Quad Axle Feeder Removed

Total Weight: 102,600lbs (46,539kg)
Axle Load: 56,090lbs (25,442kg)
Kingpin Load: 46,510lbs (21,097kg)

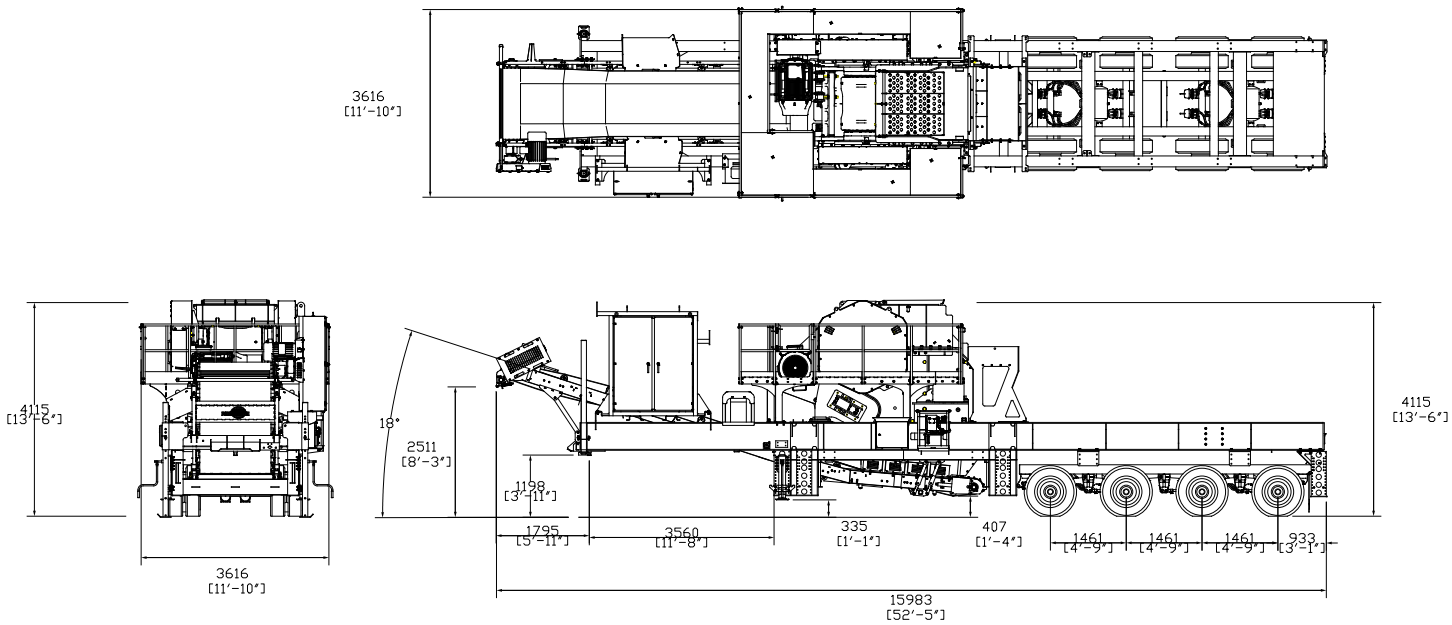

Total Weight:	102,600lbs (46,539kg)
Axle Load:	56,090lbs (25,442kg)
King Pin Load:	46,510lbs (21,097kg)

Weights and measurements dependent on options



GLADIATOR PT600

DIMENSIONS

Figure 4: Gladiator PT600
Working Position Showing Extended Quad Axle

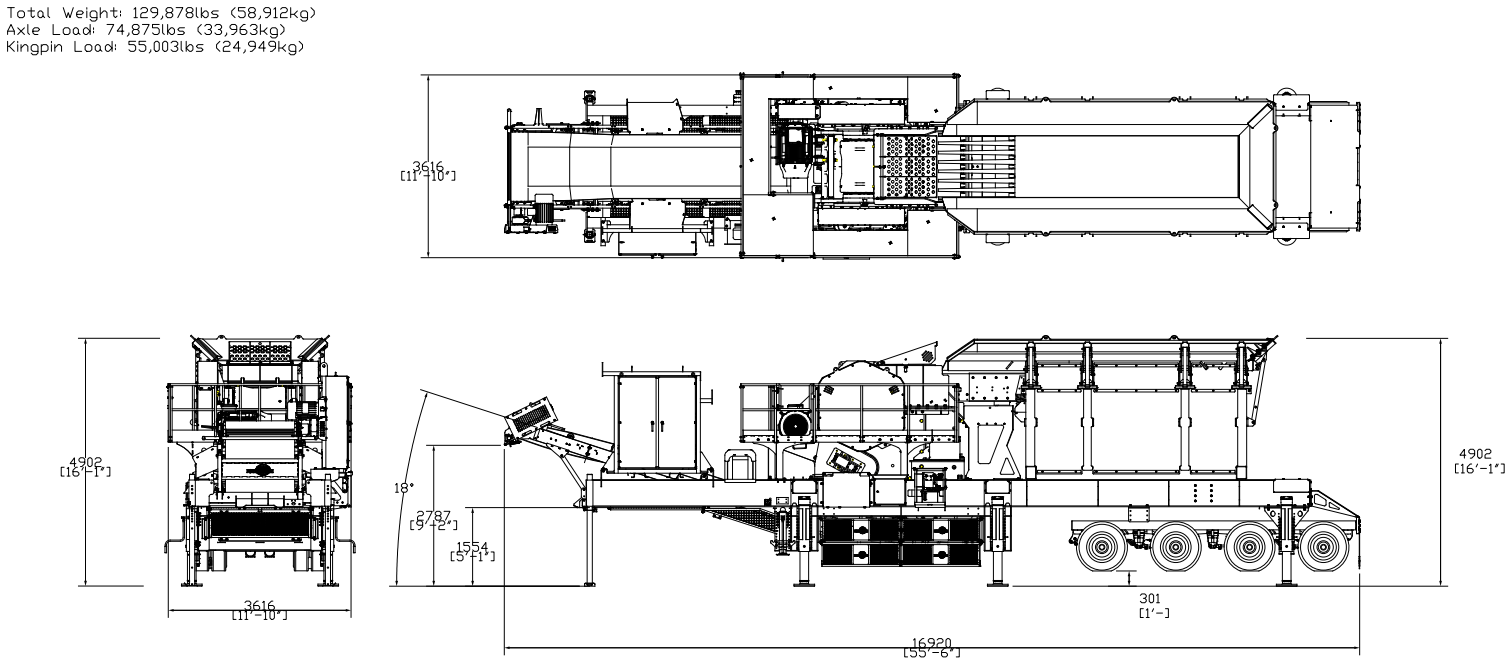

Total Weight:	129,878lbs (58,912kg)
Axle Load:	74,875lbs (33,963kg)
King Pin Load:	55,003lbs (24,949kg)

Weights and measurements dependent on options

- OVERVIEW
- JAW CRUSHER
- VGF & HOPPER
- HOPPER & CHUTE
- DISCHARGE CONVEYOR
- BOGIE
- OTHER
- OPTIONS
- DIMENSIONS



GLADIATOR PT600

DIMENSIONS

Figure 5: Gladiator PT600
Transport Position Showing Extended Quad Axle

- OVERVIEW
- JAW CRUSHER
- VGF & HOPPER
- HOPPER & CHUTE
- DISCHARGE CONVEYOR
- BOGIE
- OTHER
- OPTIONS
- DIMENSIONS

Total Weight: 129,878lbs (58,912kg)
Axle Load: 74,875lbs (33,963kg)
Kingpin Load: 55,003lbs (24,949kg)

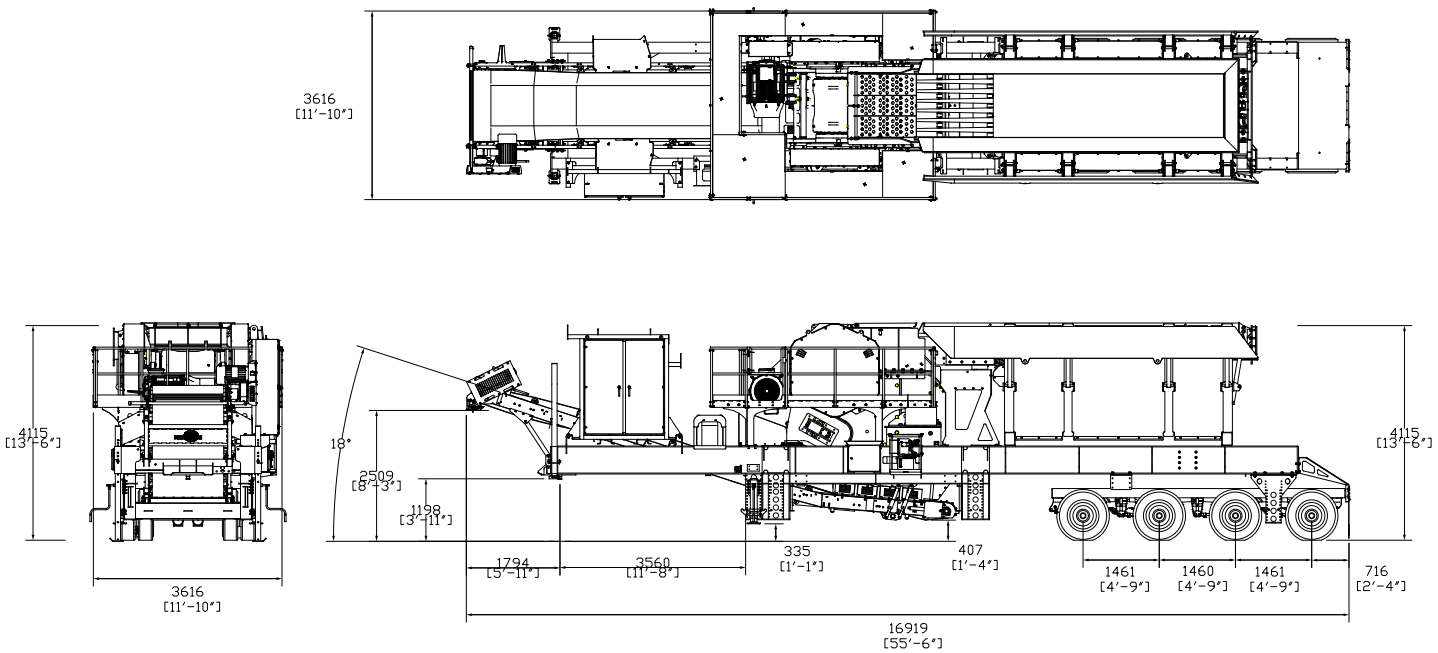

Total Weight: 129,878lbs (58,912kg)
Axle Load: 74,875lbs (33,963kg)
King Pin Load: 55,003lbs (24,949kg)

Weights and measurements dependent on options



GLADIATOR PT600

- OVERVIEW
- JAW CRUSHER
- VGF & HOPPER
- HOPPER & CHUTE
- DISCHARGE CONVEYOR
- BOGIE
- OTHER
- OPTIONS
- DIMENSIONS

DIMENSIONS

Figure 6: Gladiator PT600
Transport Position Showing Extended Quad Axle With Feeder Removed

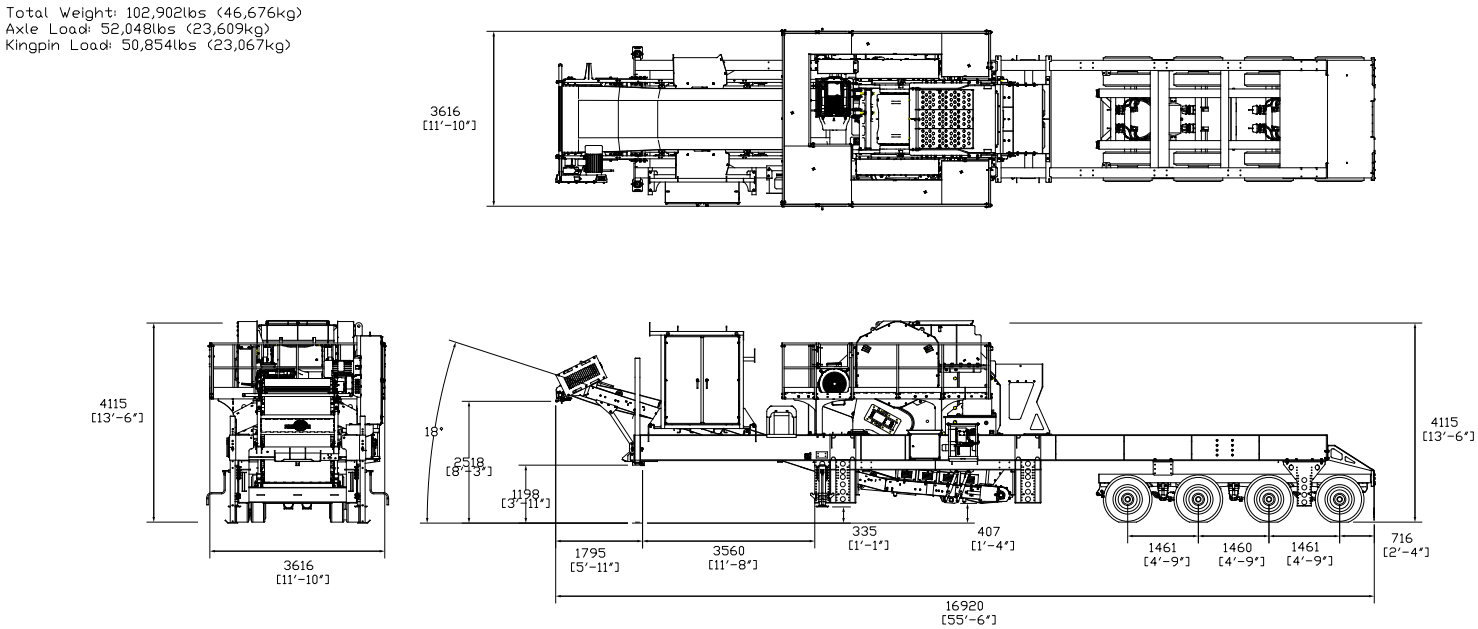

Total Weight:	102,902lbs (46,676kg)
Axle Load:	52,048lbs (23,609kg)
King Pin Load:	50,854lbs (23,067kg)

Weights and measurements dependent on options



GLADIATOR PT600

DIMENSIONS

Figure 7: Gladiator PT600
Working Position Showing 3 Plus 1 Axle

- OVERVIEW
- JAW CRUSHER
- VGF & HOPPER
- HOPPER & CHUTE
- DISCHARGE CONVEYOR
- BOGIE
- OTHER
- OPTIONS
- DIMENSIONS

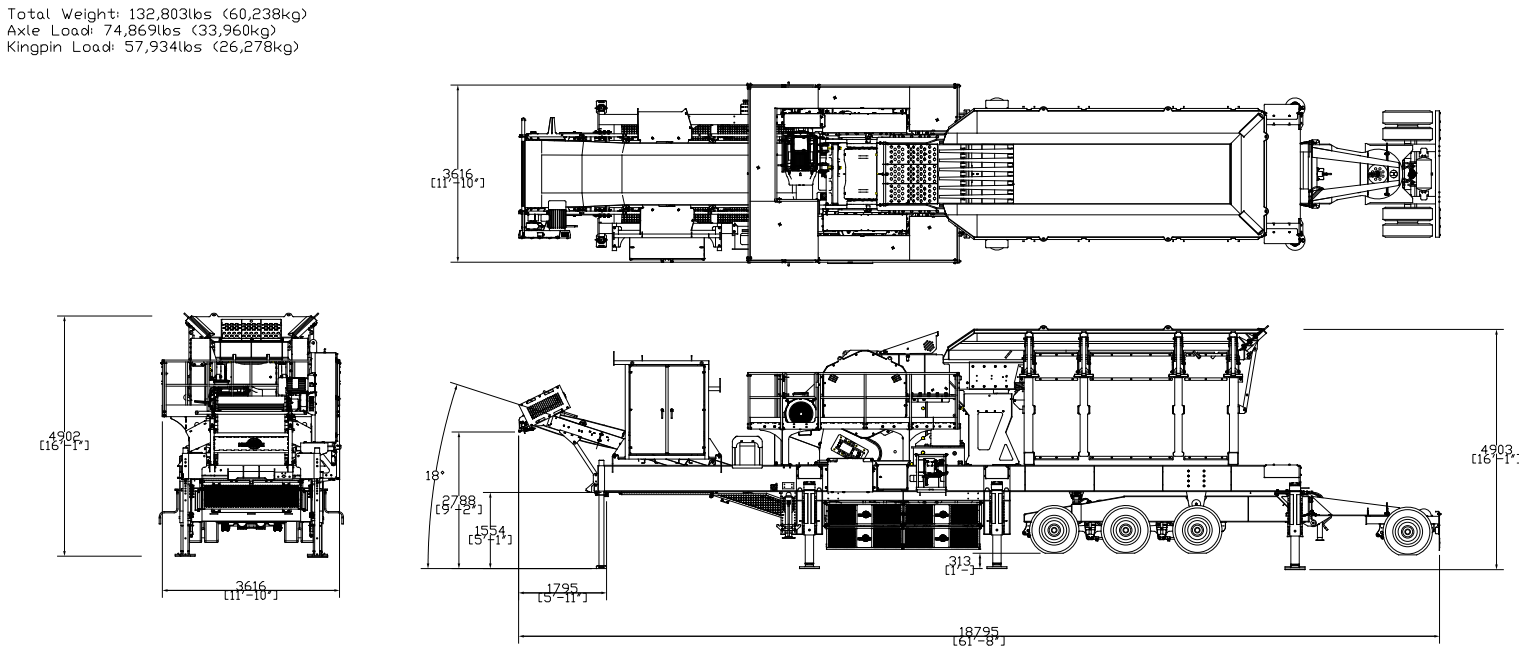

Total Weight:	132,803lbs (60,238kg)
Axle Load:	74,869lbs (33,960kg)
King Pin Load:	57,934lbs (26,278kg)

Weights and measurements dependent on options



GLADIATOR PT600

- OVERVIEW
- JAW CRUSHER
- VGF & HOPPER
- HOPPER & CHUTE
- DISCHARGE CONVEYOR
- BOGIE
- OTHER
- OPTIONS
- DIMENSIONS

DIMENSIONS

Figure 8: Gladiator PT600
Transport Position Showing 3 Plus 1 Axle

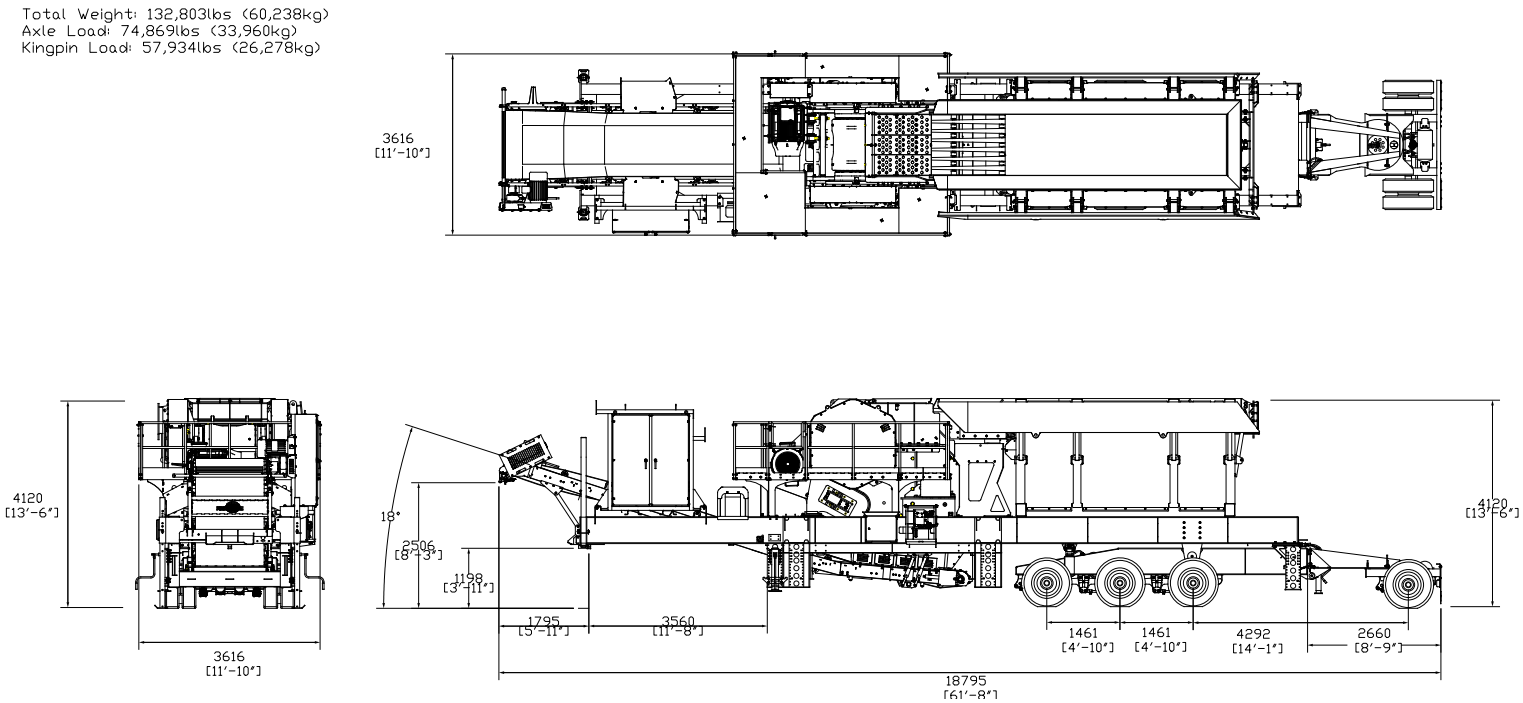

Total Weight:	132,803lbs (60,238kg)
Axle Load:	74,869lbs (33,960kg)
King Pin Load:	57,934lbs (26,278kg)

Weights and measurements dependent on options



GLADIATOR PT600

- OVERVIEW
- JAW CRUSHER
- VGF & HOPPER
- HOPPER & CHUTE
- DISCHARGE CONVEYOR
- BOGIE
- OTHER
- OPTIONS
- DIMENSIONS

DIMENSIONS

Figure 9: Gladiator PT600
Transport Position Showing 3 Plus 1 Axle Feeder Removed

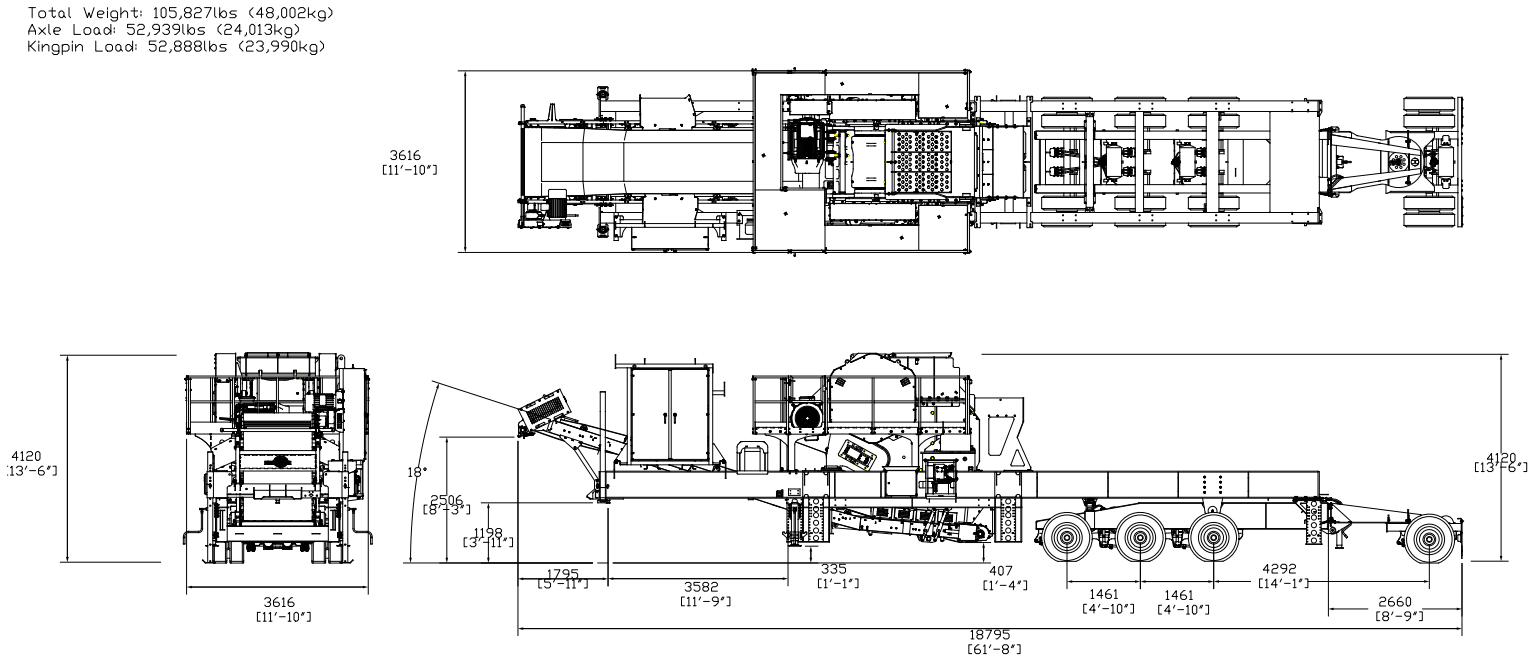

Total Weight:	105,827lbs (48,002kg)
Axle Load:	52,939lbs (24,013kg)
King Pin Load:	52,888lbs (23,990kg)

Weights and measurements dependent on options



GLADIATOR PT600

- OVERVIEW
- JAW CRUSHER
- VGF & HOPPER
- HOPPER & CHUTE
- DISCHARGE CONVEYOR
- BOGIE
- OTHER
- OPTIONS
- DIMENSIONS

DIMENSIONS

Figure 10: Gladiator PT600
Transport Position Showing 67 Stretch Spring Quad Axle

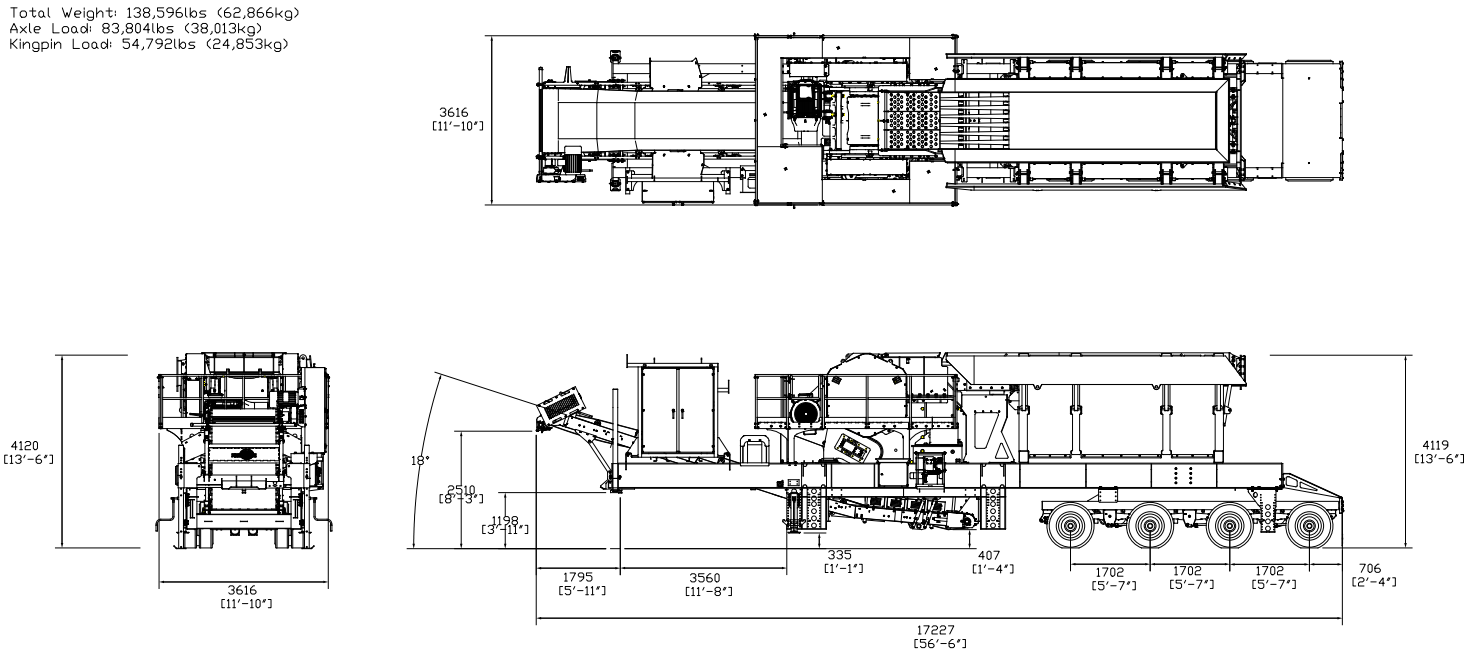

Total Weight:	138,596lbs (62,866kg)
Axle Load:	83,804lbs (38,013kg)
King Pin Load:	54,792lbs (24,853kg)

Weights and measurements dependent on options



GLADIATOR PT600

- OVERVIEW
- JAW CRUSHER
- VGF & HOPPER
- HOPPER & CHUTE
- DISCHARGE CONVEYOR
- BOGIE
- OTHER
- OPTIONS
- DIMENSIONS

DIMENSIONS

Figure 11: Gladiator PT600
Transport Position Showing 67 Stretch Spring Quad Axle With Feeder Removed

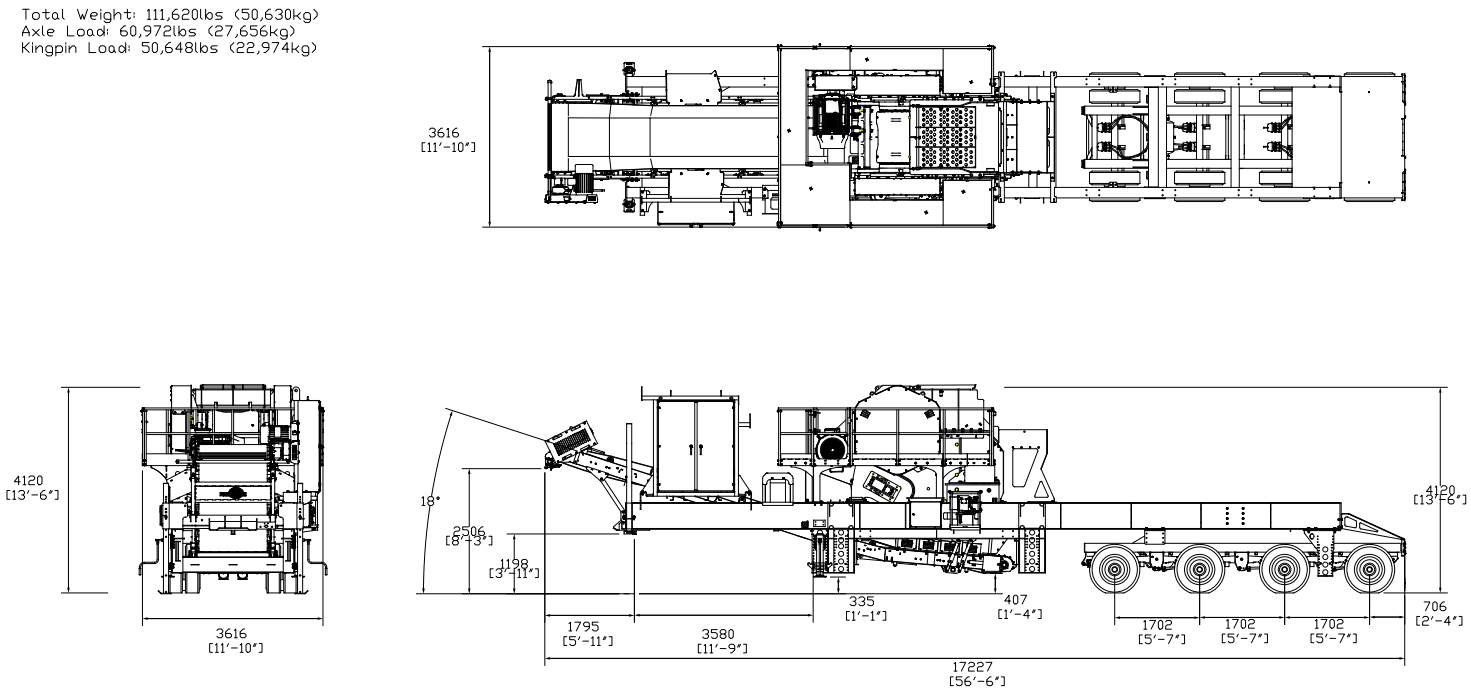

Total Weight:	111,620lbs (50,630kg)
Axle Load:	60,972lbs (27,656kg)
King Pin Load:	50,648lbs (22,974kg)

Weights and measurements dependent on options



GLADIATOR PT600

- OVERVIEW
- JAW CRUSHER
- VGF & HOPPER
- HOPPER & CHUTE
- DISCHARGE CONVEYOR
- BOGIE
- OTHER
- OPTIONS
- DIMENSIONS

DIMENSIONS

Figure 12: Gladiator PT600
Working Position Showing 67 Stretch Spring Quad Axle

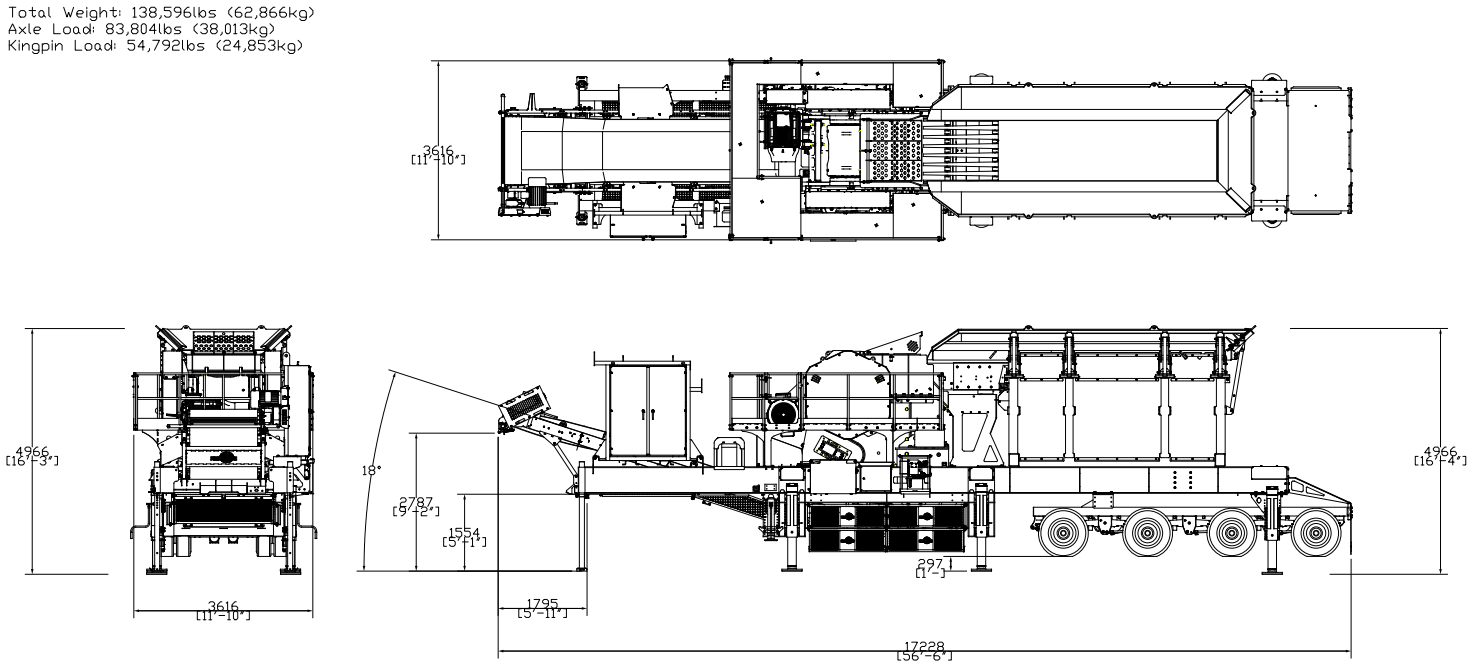

Total Weight:	138,596lbs (62,866kg)
Axle Load:	83,804lbs (38,013kg)
King Pin Load:	54,792lbs (24,853kg)

Weights and measurements dependent on options



GLADIATOR PT600

- OVERVIEW
- JAW CRUSHER
- VGF & HOPPER
- HOPPER & CHUTE
- DISCHARGE CONVEYOR
- BOGIE
- OTHER
- OPTIONS
- DIMENSIONS

DIMENSIONS

Figure 13: Gladiator PT600
Removed Feeder Module

APPROX. FEEDER MODULE WEIGHT: 28,422LBS

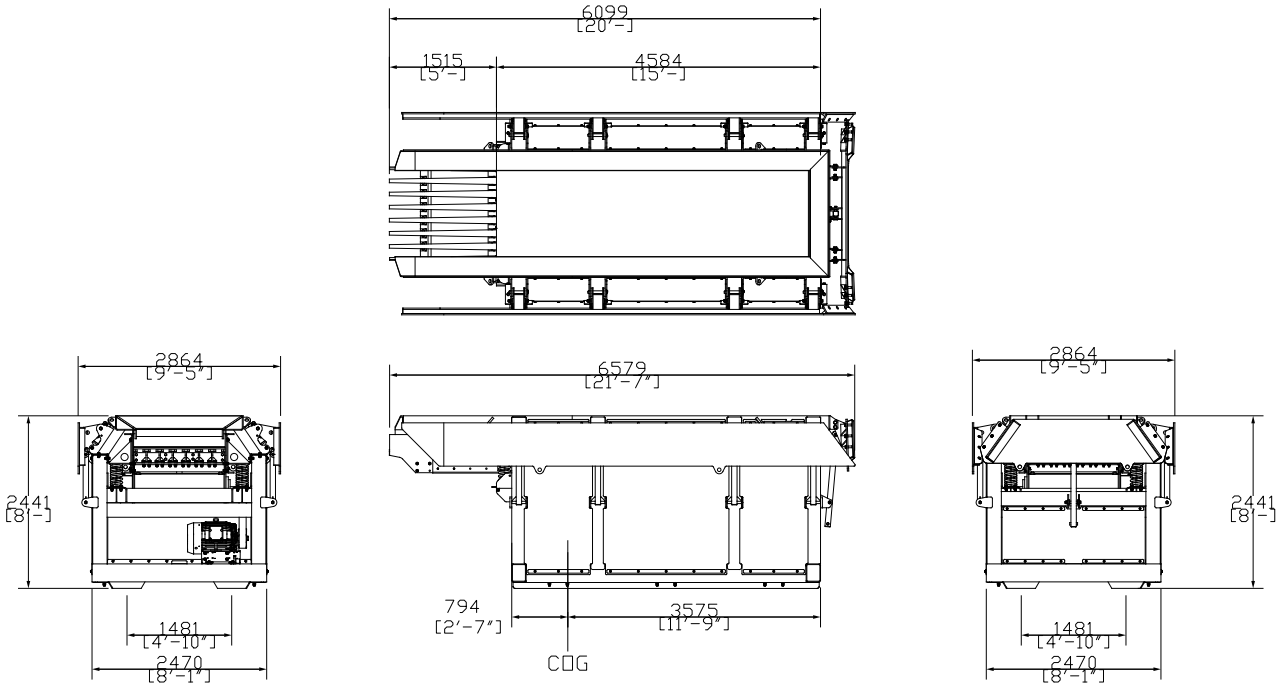

Feeder Module Weight: 28,422lbs (12,892kg)

Weights and measurements dependent on options

Please consult Powerscreen if you have any other specific requirements in respect of guarding, noise or vibration levels, dust emissions, or any other factors relevant to health and safety measures or environmental protection needs. On receipt of specific requests, we will endeavour to ascertain the need for additional equipment and, if appropriate, quote extra to contract prices.

All reasonable steps have been taken to ensure the accuracy of this publication, however due to a policy of continual product development we reserve the right to change specifications without notice.

It is the importers' responsibility to check that all equipment supplied complies with local legislation regulatory requirements.

Plant performance figures given in this brochure are for illustration purposes only and will vary depending upon various factors, including feed material gradings and characteristics. Information relating to capacity or performance contained within this publication is not intended to be, nor will be, legally binding.

GET IN TOUCH

Dungannon
200 Coalisland Road, Dungannon,
Co Tyrone, BT71 4DR, Northern Ireland
Tel: +44 (0) 28 87 718 500
Fax: +44 (0) 28 87 747 231

Louisville
11001 Electron Drive,
Louisville, Kentucky, 40299 USA
Tel: +1 502 736 5200
Fax: +1 502 736 5202

www.powerscreen.com