POWERSCREEN®
GLADIATOR TP320SR

WHEELED ELECTRIC UNIT

GET STARTED



MADE IN THE USA

TECHNICAL SPECIFICATION - REV 0 01/10/2020

To use my interactive features I need to be opened in 'Adobe Acrobat Reader' click here to download



GLADIATOR TP320SR

- OVERVIEW
- CRUSHER
  - CRUSHER SPECIFICATION
  - CRUSHER FEATURES
  - CRUSHER OPTIONS
- HOPPER & VGF
- SCREENBOX
- FINES & UNDER CRUSHER CONVEYORS
- RECIRCULATING & CROSS CONVEYORS
- POWER UNIT & GENERATOR
- BOGIE
- OTHER
- OPTIONS
- OPTIONS 1
- DIMENSIONS

OVERVIEW

SPECIFICATION

Transport	**Length**	69' (21.03m)
	Height	13' 5'' (4.09m)
	Width	11' 10'' (3,31m)
Working	**Length**	68' 10'' (20.98m)
	Height	16' 6'' (5.03m)
	Width	18' 11'' (5.77m)

Plant Colour	RAL 5021, RAL 7024

	Kingpin Weights	**Axle Weights**
Base Plant:	39,958lbs (18,125kg)	54,048lbs (24,516kg)
+Dirt Conveyor:	467lbs (212kg)	2,128lbs (965kg)
+Levelling Kacks:	313lbs (142kg)	310lbs (141kg)
+Run On Jacks:	1,085lbs (492kg)	1,075lbs (488kg)
+Screen Base Walkway:	962lbs (436kg)	123lbs (65kg)
+Magnet:	2,337lbs (1,060kg)	1,465lbs (666kg)

The Powerscreen Gladiator TP320SR is a wheeled, hybrid-electric drive closed circuit impact crusher. This closed circuit crushing and screening plant combines the tried and tested Trakpactor 320 impact crusher and Chieftain 1700 2 deck inclined screenbox for recirculation.

The crusher is hydraulically clutch driven as standard via a 350hp Scania diesel engine. All of the other components are driven via an onboard 150kW generator with the addition of a gas power unit to power some hydraulic functions such as screen raise and levelling jacks. There is however the option to remove this engine and go fully electric.

The Gladiator TP320SR, with its large screenbox, wide conveyors and low maintenance electric drive components ensures to be a highly productive, high value plant.

FEATURES & BENEFITS

- Output potential of up to 320 tph / 353 US tph - depending on material type and crusher settings.
- Suitable for a vairety of feed materials.
- Excellent product shape.
- High reduction ratio.
- Proven Terex impact crusher with hydraulic overload protection, 4 bar rotor & twin apron design.
- Access ladders on both sides to access the upper deck.
- E-Stops on both sides of the unit.

APPLICATIONS

Aggregate
Sand & gravel
Blasted rock
River rock

Recycling
Top soil
C&D waste
Composed materials
Wood by-products
Overburden
Foundry waste

Mining
Processed ores
Processed minerals



GLADIATOR TP320SR

- OVERVIEW
- CRUSHER
  - CRUSHER SPECIFICATION
  - CRUSHER FEATURES
  - CRUSHER OPTIONS
- HOPPER & VGF
- SCREENBOX
- FINES & UNDER CRUSHER CONVEYORS
- RECIRCULATING & CROSS CONVEYORS
- POWER UNIT & GENERATOR
- BOGIE
- OTHER
- OPTIONS
- OPTIONS 1
- DIMENSIONS

CRUSHER

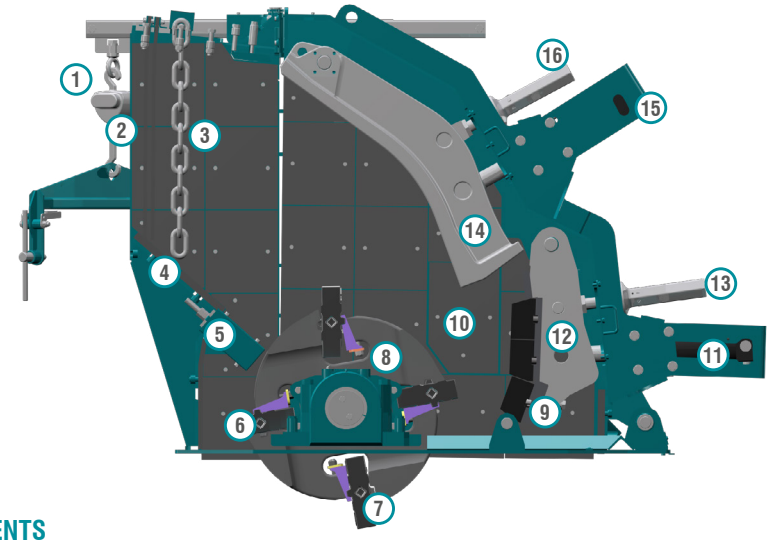

PRINCIPAL COMPONENTS

1: Crusher Opening
2: Rubber Curtain
3: Chain Curtain
4: Inlet Chute
5: Inlet Wear Bar
6: Full Blow Bar
7: Half Blow Bar
8: Rotor
9-10: Wear Liners
11: Control Cylinder
12: Bottom Impact Apron
13: Apron Adjustment Spindle
14: Top Impact Apron
15: Control Cylinder
16: Apron Adjustement Spindle

PRINCIPLES OF OPERATION

Material enters via crusher opening & slides down the inlet chute where it is struck by the blow bars fixed within the rotor. This initial impact breaks the material which is then accelerated towards the top apron where more reduction takes place on impact. This material then falls back onto the blow bars & the cycle is repeated until the material is small enough to pass between the top apron & blow bar. Further reduction occurs on the bottom apron until the material can again pass through the gap & discharge from the underside of the crusher.

Should an un-crushable object enter the chamber, the overload cylinders will relieve & allow the object to pass. The cylinders will then return to the pre-set crushing position. The pre-set gap is adjusted by turning the adjustment spindle whilst the weight of the apron is held on the cylinder (hydraulic assist).

The hydraulic cylinders are pre-loaded to minimise apron bounce & wear on the cylinders.
This arrangement also greatly reduces the oversize produced & is Patented: GB2455203



GLADIATOR TP320SR

- OVERVIEW
- CRUSHER
  - CRUSHER SPECIFICATION
  - CRUSHER FEATURES
  - CRUSHER OPTIONS
- HOPPER & VGF
- SCREENBOX
- FINES & UNDER CRUSHER CONVEYORS
- RECIRCULATING & CROSS CONVEYORS
- POWER UNIT & GENERATOR
- BOGIE
- OTHER
- OPTIONS
- OPTIONS 1
- DIMENSIONS

CRUSHER SPECIFICATION

Feed opening:	44.5” x 31.5” (1130mm x 800mm)
Max lump size*:	18in³ (450mm³) / 31” (780mm) diagonally / 31 x 20 x 10” (800 x 500 x 250mm) slab * depending on material & blow bar specification
Rotor width:	43.3” (1100mm)
Rotor diameter:	40.5” (1030mm)
Number of aprons:	2
Max clearance:	7” (180mm) on both aprons
Max OSS setting:	6” (150mm) upper apron, 2” (50mm) lower apron
Min CSS setting:	2.9” (75mm) upper apron, 0.75” (20mm) lower apron
Blow bars:	Total of 4 blow bars
Blow bar removal:	Vertically
Blow bar configuration:	2 full & 2 half (optional 4 full)
Setting adjustment:	Hydraulic assist
Overload protection:	Hydraulic
Rotor speeds:	105 - 131 ft/s (595 - 735rpm) (32 - 40 m/s)
Applications:	Demolition / recycling / quarry
Crusher weight:	19,842lbs (9,000kg)
Full blow bar weight:	485lbs (220kg)
Side liners:	0.75” (20mm) thick, abrasive resistant steel

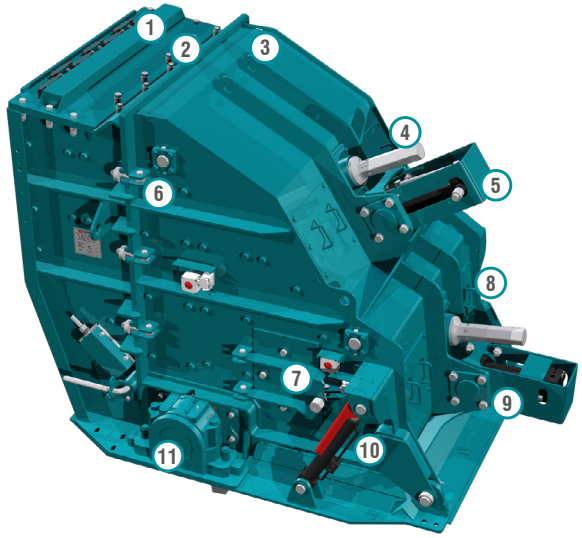

PRINCIPAL COMPONENTS

1: Chain curtain cover
2: Main welded body
3: Impactor hinged section
4: Toggle bolts with enclosed polyurethane shock absorber
5: Inspector covers
6: Hydraulic overload & adjustment cylinders
7: Side door
8: Inspection covers
9: Bearing plumber block housing with mud guard & heavy duty labyrinth seals
10: Trunions
11: Hinged section opening cylinder



GLADIATOR TP320SR

- OVERVIEW
- CRUSHER
  - CRUSHER SPECIFICATION
  - CRUSHER FEATURES
  - CRUSHER OPTIONS
- HOPPER & VGF
- SCREENBOX
- FINES & UNDER CRUSHER CONVEYORS
- RECIRCULATING & CROSS CONVEYORS
- POWER UNIT & GENERATOR
- BOGIE
- OTHER
- OPTIONS
- OPTIONS 1
- DIMENSIONS

CRUSHER FEATURES

Crusher body: Precision fabricated from structural steel plate & fully lined with replaceable 500 HB abrasion resistant liner plates. Hinged side door allows access to apron tips & rotor for gap measurements & inspection. Complete hinged section opens hydraulically to allow blow bar removal & replacement, apron & liner replacement or major maintenance.

Rotor: Structural steel & fitted with four reversible, replaceable & fully clamped blow bars

Bearings: Double row self aligning spherical roller bearing fitted each end of rotor

Aprons: Cast manganese steel with replaceable 500 HB abrasion resistant wear plate on tip of bottom apron

Drive: Direct through wedge belts with tensioning system on the power unit

Lubrication: Grease lubricated rotor bearings fitted with inner & outer independently lubricated heavy duty labyrinth seals

Blow bars: Standard blow bar is martensitic steel, options are available in ceramic, medium chrome, medium chrome ceramic, high chrome, high chrome ceramic & toughened chrome

APPLICATIONS

This plant is designed for both demolition & quarrying applications. When fitted with martensitic or ceramic blow bars the crusher will tolerate small quantities of steel reinforcing bar in the feed. However, the machine is not designed to accept large pieces of steel or other un-crushable objects & the feed material should be assessed / inspected for suitability prior to crushing. It is vitally important that large pieces of steel or similar un-crushable objects are not allowed to enter the crushing chamber as severe damage & injury may occur.

When high chrome bars are fitted **all** steel should be removed from the feed material. The machine should only be used on quarry applications or clean materials such as asphalt.





GLADIATOR TP320SR

- OVERVIEW
- CRUSHER
  - CRUSHER SPECIFICATION
  - CRUSHER FEATURES
  - CRUSHER OPTIONS
- HOPPER & VGF
- SCREENBOX
- FINES & UNDER CRUSHER CONVEYORS
- RECIRCULATING & CROSS CONVEYORS
- POWER UNIT & GENERATOR
- BOGIE
- OTHER
- OPTIONS
- OPTIONS 1
- DIMENSIONS

CRUSHER OPTIONS

BLOW BAR JIB CRANE

Part No. CR014-054-601

1: Fixes to pre-existing allocated mounting points on chamber fixed body kit provides all necessary parts with no rework required

2: Pivot and track facilitates full access to blow bar and swings clear of body during operation with minimal footprint

3: 500 kg s.w.l. pulley block

4: Designed to work with chamber blow bar cradle

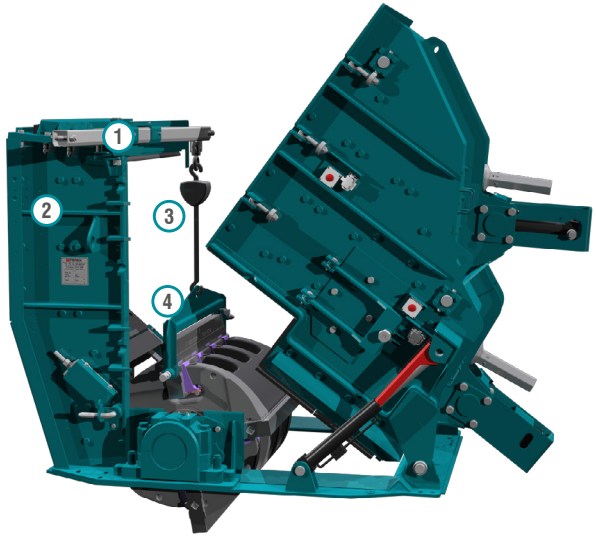

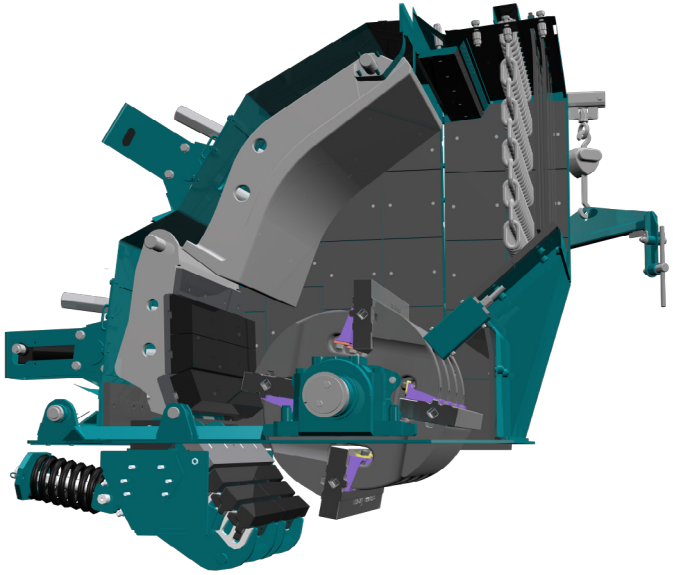

GRINDING PATH

Part No. CR014-193-601

1: Lubricated split pivot blocks for ease of maintenance

2: Self retained manganese steel grinding rails with abrasion resistant steel top plate

3: Lubricated adjusting spindle with provision to fit socket for ease of adjustment

4: Kit provides all necessary parts to retrofit to existing feedboot with no rework required



GLADIATOR TP320SR

- OVERVIEW
- CRUSHER
  - CRUSHER SPECIFICATION
  - CRUSHER FEATURES
  - CRUSHER OPTIONS
- HOPPER & VGF
- SCREENBOX
- FINES & UNDER CRUSHER CONVEYORS
- RECIRCULATING & CROSS CONVEYORS
- POWER UNIT & GENERATOR
- BOGIE
- OTHER
- OPTIONS
- OPTIONS 1
- DIMENSIONS

HOPPER & VGF

Hopper Capacity: 11.2 cu.yd (8.6m³)
VGF Length: 14' 3'' (4.34m)
VGF Width: 3' 6' (1.07m)
Motor: 20hp (15kW) variable speed electric motor
Feed Height: 13' 3'' (4.04m)

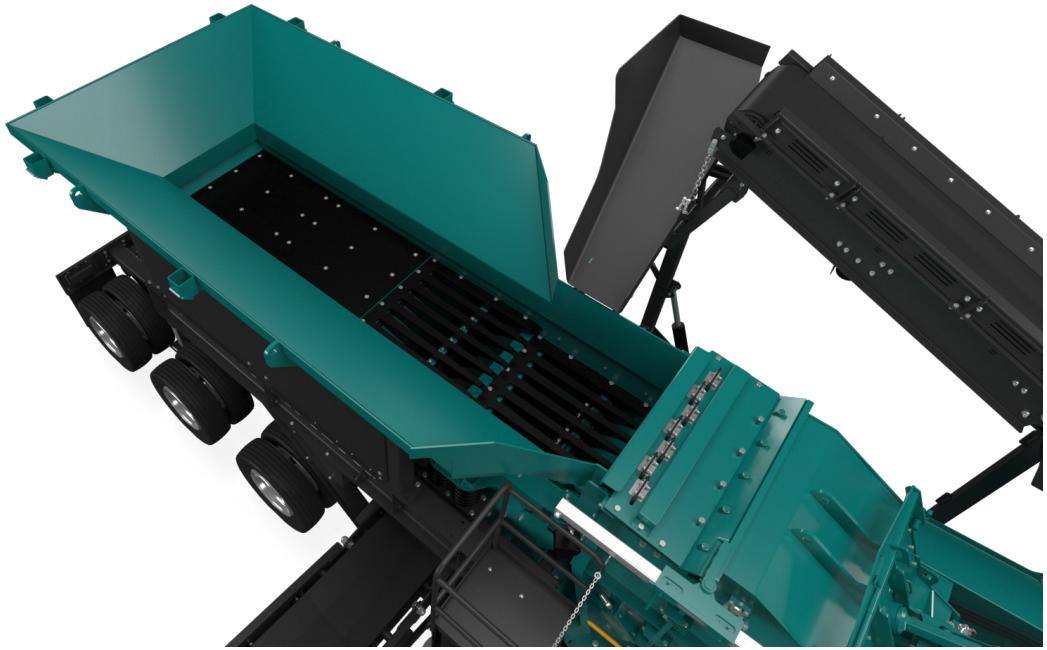



GLADIATOR TP320SR

- OVERVIEW
- CRUSHER
  - CRUSHER SPECIFICATION
  - CRUSHER FEATURES
  - CRUSHER OPTIONS
- HOPPER & VGF
- SCREENBOX
- FINES & UNDER CRUSHER CONVEYORS
- RECIRCULATING & CROSS CONVEYORS
- POWER UNIT & GENERATOR
- BOGIE
- OTHER
- OPTIONS
- OPTIONS 1
- DIMENSIONS

SCREENBOX

16' x 5' (4.8m x 1.5m) 2 deck incline screen
Highly aggressive screen drive
Grease filled 2 bearing screenbox

16' x 5' (4.8m x 1.5m) top deck
13' x 5' (3.9m x 1.53m) bottom deck

4 of media sections (side tension) top deck
2 of media sections (end tension) bottom deck

Hydraulic screen angle fixed at 20°
Hydraulic screen tensioning on bottom deck
Walkways on 3 sides of the screenbox
Speed: 1050rpm (standard)
Throw: 6mm (standard)
Motor: 20hp (15kW) electric motor
Optional service platform with folding ladders

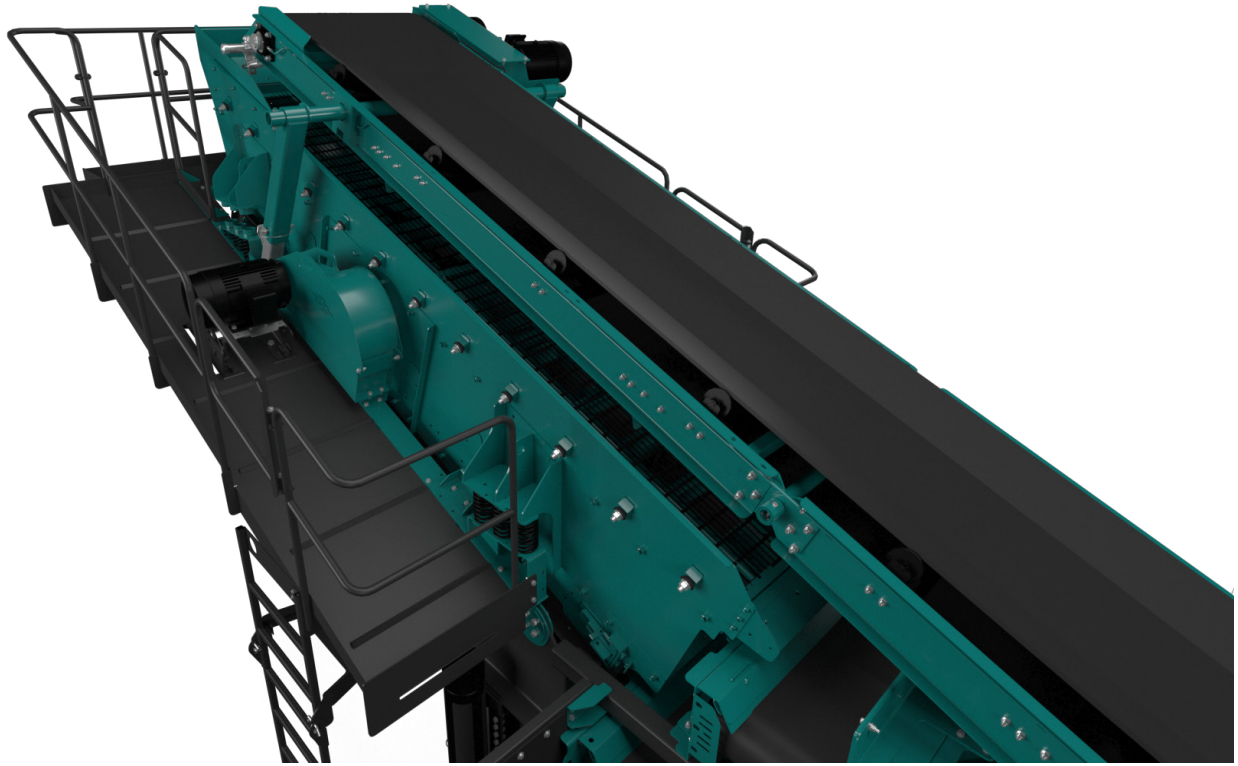



GLADIATOR TP320SR

- OVERVIEW
- CRUSHER
  - CRUSHER SPECIFICATION
  - CRUSHER FEATURES
  - CRUSHER OPTIONS
- HOPPER & VGF
- SCREENBOX
- FINES & UNDER CRUSHER CONVEYORS
- RECIRCULATING & CROSS CONVEYORS
- POWER UNIT & GENERATOR
- BOGIE
- OTHER
- OPTIONS
- OPTIONS 1
- DIMENSIONS

FINES & UNDER CRUSHER CONVEYOR

FINES CONVEYOR

Belt Width: 42'' (1067mm)
Discharge Height: 8' 7'' (2.6m)
Stockpile Capacity: 34 yd³ (26m³)
Motor: 10hp
3 ply belt,

UNDER CRUSHER CONVEYOR

Belt Width: 42'' (1067mm)
Motor: 20hp
Extra heavy 3 Ply - 600 PIW belt
Automatic hydraulic tail lift for transport

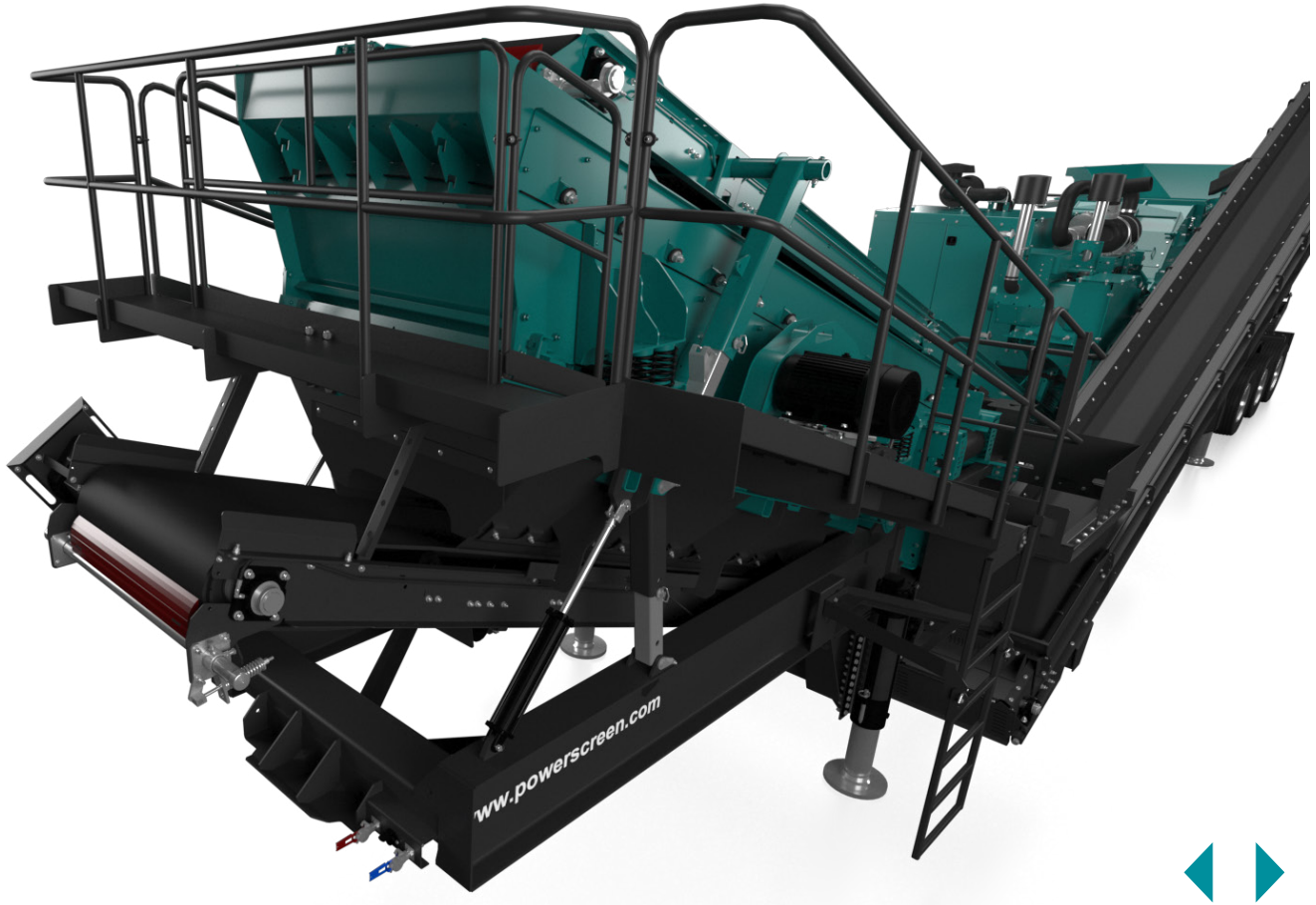



GLADIATOR TP320SR

- OVERVIEW
- CRUSHER
  - CRUSHER SPECIFICATION
  - CRUSHER FEATURES
  - CRUSHER OPTIONS
- HOPPER & VGF
- SCREENBOX
- FINES & UNDER CRUSHER CONVEYORS
- RECIRCULATING & CROSS CONVEYORS
- POWER UNIT & GENERATOR
- BOGIE
- OTHER
- OPTIONS
- OPTIONS 1
- DIMENSIONS

RECIRCULATING & CROSS CONVEYORS

RECIRCULATING CONVEYOR

Belt Width: 24'' (610mm)

Motor: 7.5hp (5.6kW) electric

Hydraulically raises for operation.

Hydraulically lowers for travel.

Accepts material from both cross conveyors and discharges to the grizzly section,

3 ply belt.

CROSS CONVEYORS X 2

Belt Width: 24'' (610mm)

Motor: 5hp (3.7kW) electric

Bottom deck conveyor is reversible.

Cartridge style full length skirts.

3 ply belt

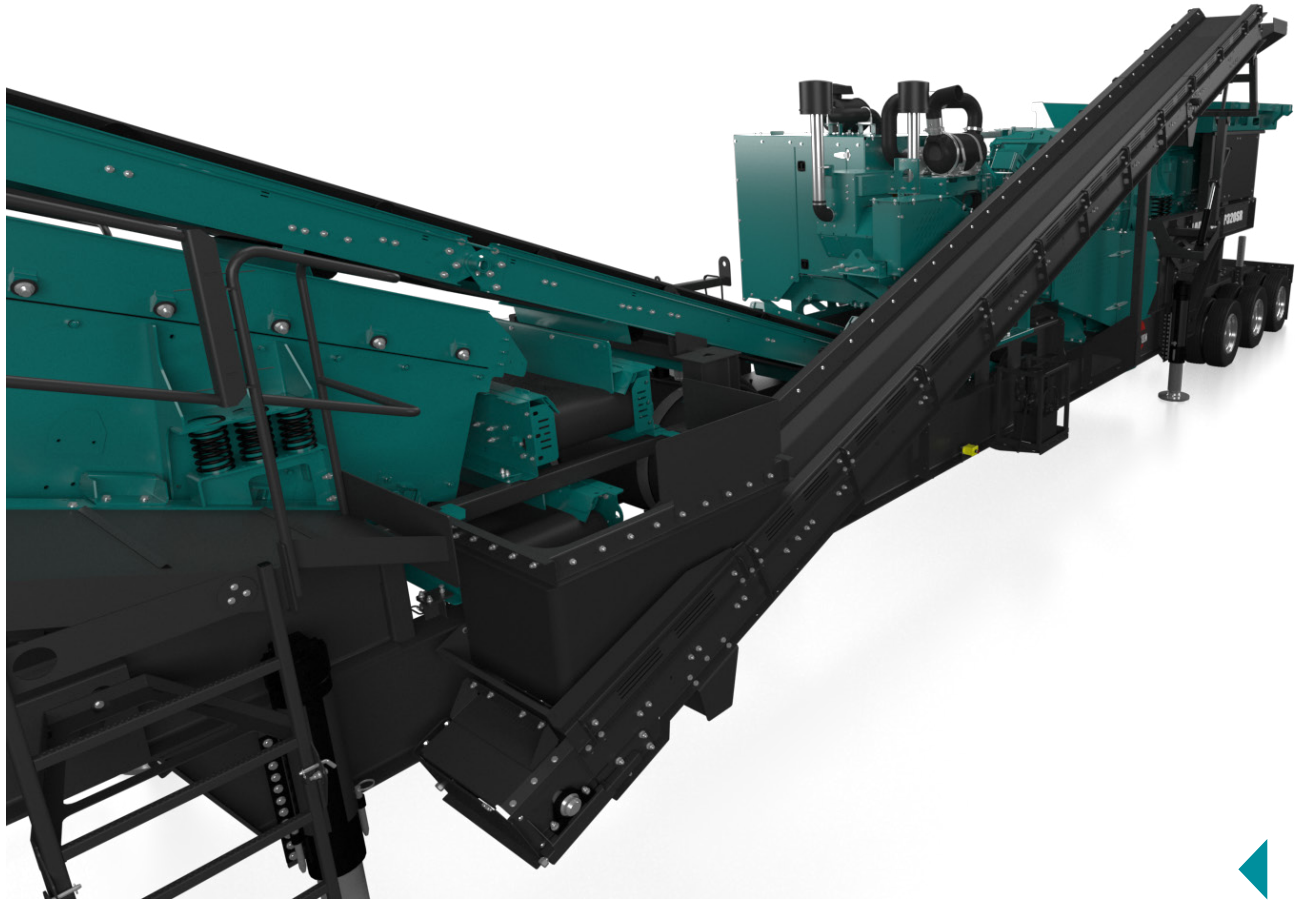



GLADIATOR TP320SR

- OVERVIEW
- CRUSHER
  - CRUSHER SPECIFICATION
  - CRUSHER FEATURES
  - CRUSHER OPTIONS
- HOPPER & VGF
- SCREENBOX
- FINES & UNDER CRUSHER CONVEYORS
- RECIRCULATING & CROSS CONVEYORS
- POWER UNIT & GENERATOR
- BOGIE
- OTHER
- OPTIONS
- OPTIONS 1
- DIMENSIONS

POWER UNIT & GENERATOR

POWER UNIT

Engine Tier 4F / Stage IV:
Scania

Performance:
350hp

Optional Tier 3 engine

GENERATOR

Output: 150kW
460V
3 Phase
60Hz





GLADIATOR TP320SR

- OVERVIEW
- CRUSHER
  - CRUSHER SPECIFICATION
  - CRUSHER FEATURES
  - CRUSHER OPTIONS
- HOPPER & VGF
- SCREENBOX
- FINES & UNDER CRUSHER CONVEYORS
- RECIRCULATING & CROSS CONVEYORS
- POWER UNIT & GENERATOR
- BOGIE
- OTHER
- OPTIONS
- OPTIONS 1
- DIMENSIONS

BOGIE

Type: Heavy duty spring suspension
Size: 295/75 R22.5
No of Axles: 3
No of Studs: 10
Brakes: Air brakes





GLADIATOR TP320SR

- OVERVIEW
- CRUSHER
  - CRUSHER SPECIFICATION
  - CRUSHER FEATURES
  - CRUSHER OPTIONS
- HOPPER & VGF
- SCREENBOX
- FINES & UNDER CRUSHER CONVEYORS
- RECIRCULATING & CROSS CONVEYORS
- POWER UNIT & GENERATOR
- BOGIE
- OTHER
- OPTIONS
- OPTIONS 1
- DIMENSIONS

OTHER

JACKS

Gas powered hydraulic levelling jacks & screen lift

4 no of 6'' x 18'' hydraulic levelling jacks

GAS POWERED HYDRAULICS

Used for:

- Opening crusher
- Adjusting CSS
- Screen & recirc conveyor raise
- Hydraulic jack

PANEL

Removable electric Switchgear panel.

Contains simple push button control system.

NEMA 4 panel has door mounted push button controls and hour meter.

Variable speed inverter for 20hp feeder motor.

Reversing starters for 2nd cross conveyor.

PLATFORMS

Crusher service platforms with access ladder

OTHER

Lockable side mounted 4' toolbox

Blowbar cradle

Remote greasing lines

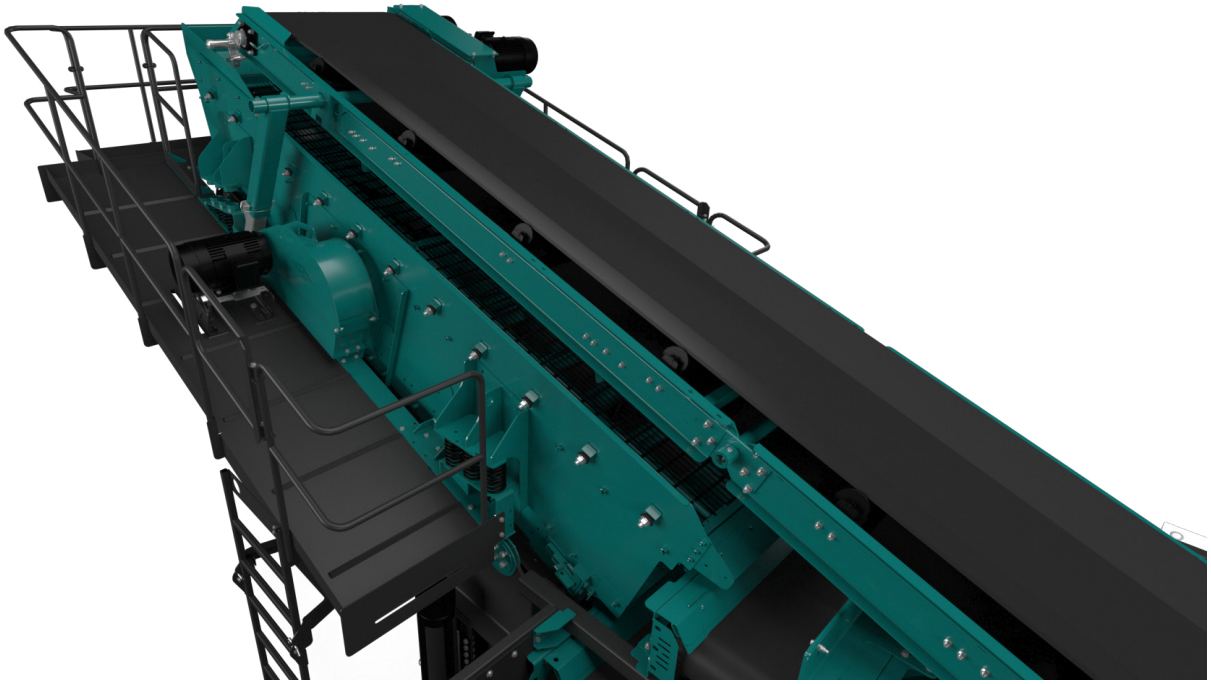



GLADIATOR TP320SR

- OVERVIEW
- CRUSHER
  - CRUSHER SPECIFICATION
  - CRUSHER FEATURES
  - CRUSHER OPTIONS
- HOPPER & VGF
- SCREENBOX
- FINES & UNDER CRUSHER CONVEYORS
- RECIRCULATING & CROSS CONVEYORS
- POWER UNIT & GENERATOR
- BOGIE
- OTHER
- OPTIONS
- OPTIONS 1
- DIMENSIONS

OPTIONS

Bypass Conveyor

Belt Width: 24'' (610mm)
Motor: 7.5hp (5.6kW)
Discharge Height: 6' (1.83m)
Stockpile Capacity: 12 yd^3 ($9m^3$)

Pre-Screen

Pan Feeder Length: 100'' (1.2m)
Pan Feeder Width: 42'' (1.07m)
Pre-Screen Length: 78'' (1.98m)
Pre-Screen Width: 42'' (1.07m)
Standard Grizzly: 1.5'' (38mm) grizzly fingers
Optional Grizzly: 2'', 2.5'', 3''
Rubber blanking mat on bottom deck





GLADIATOR TP320SR

- OVERVIEW
- CRUSHER
  - CRUSHER SPECIFICATION
  - CRUSHER FEATURES
  - CRUSHER OPTIONS
- HOPPER & VGF
- SCREENBOX
- FINES & UNDER CRUSHER CONVEYORS
- RECIRCULATING & CROSS CONVEYORS
- POWER UNIT & GENERATOR
- BOGIE
- OTHER
- OPTIONS
- OPTIONS 1
- DIMENSIONS

OPTIONS 1

- Radio remote
- Screen side platforms & ladder
- Dual pinned hydraulic run on jacks
- Self cleaning cross belt magnet
- Folding bypass conveyor
- Various grizzly options for bar spacing, punch plate and bottom deck mesh
- Pre-screen
- Hopper extensions
- All electric option: Remove diesel engine, fluid coupling and 150kW generator and replace with 200hp electric crusher motor and drive, Electrical panel to include 200hp soft start with bypass contact for crusher motor.





GLADIATOR TP320SR

DIMENSIONS

Figure 1: Gladiator TP320SR
Working Position

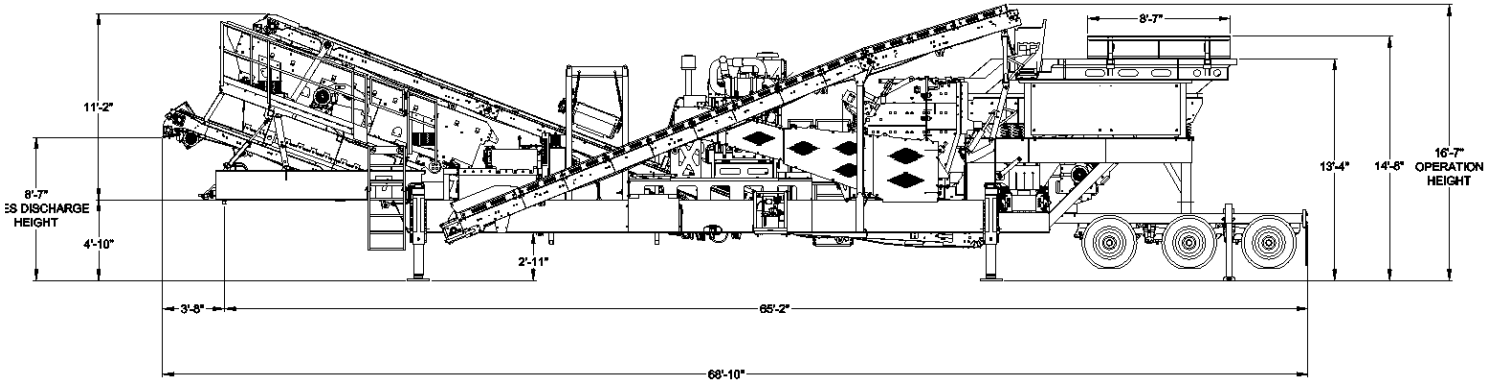

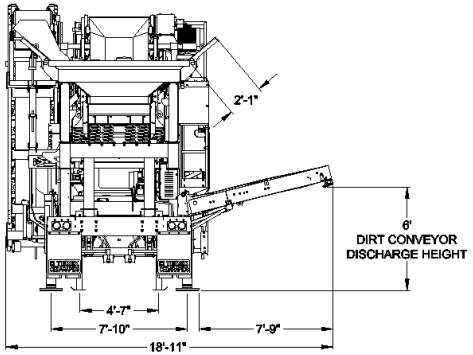

MORE DIMENSIONS OVERLEAF

- OVERVIEW
- CRUSHER
  - CRUSHER SPECIFICATION
  - CRUSHER FEATURES
  - CRUSHER OPTIONS
- HOPPER & VGF
- SCREENBOX
- FINES & UNDER CRUSHER CONVEYORS
- RECIRCULATING & CROSS CONVEYORS
- POWER UNIT & GENERATOR
- BOGIE
- OTHER
- OPTIONS
- OPTIONS 1
- DIMENSIONS



GLADIATOR TP320SR

- OVERVIEW
- CRUSHER
  - CRUSHER SPECIFICATION
  - CRUSHER FEATURES
  - CRUSHER OPTIONS
- HOPPER & VGF
- SCREENBOX
- FINES & UNDER CRUSHER CONVEYORS
- RECIRCULATING & CROSS CONVEYORS
- POWER UNIT & GENERATOR
- BOGIE
- OTHER
- OPTIONS
- OPTIONS 1
- DIMENSIONS

DIMENSIONS

Figure 2: Gladiator TP320SR
Transport Position

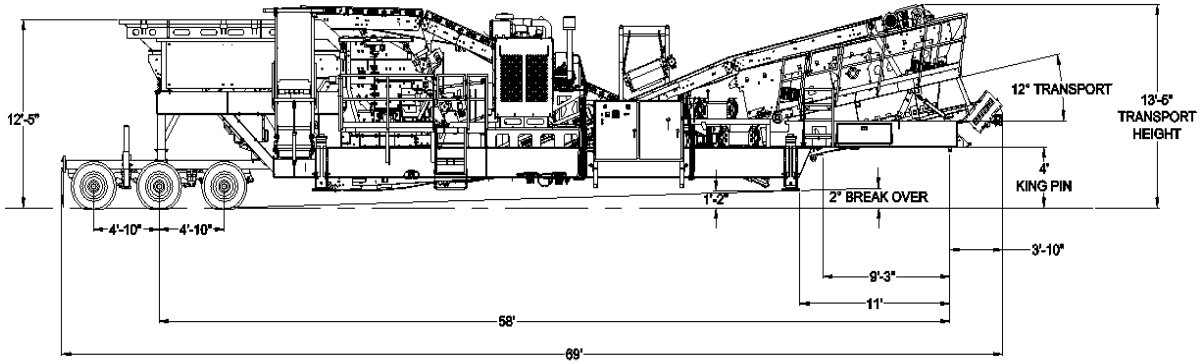

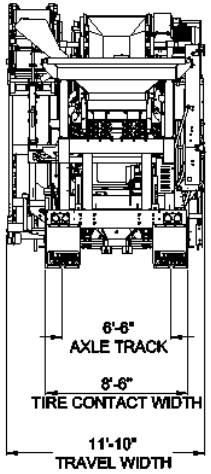

Please consult Powerscreen if you have any other specific requirements in respect of guarding, noise or vibration levels, dust emissions, or any other factors relevant to health and safety measures or environmental protection needs. On receipt of specific requests, we will endeavour to ascertain the need for additional equipment and, if appropriate, quote extra to contract prices.

All reasonable steps have been taken to ensure the accuracy of this publication, however due to a policy of continual product development we reserve the right to change specifications without notice.

It is the importers' responsibility to check that all equipment supplied complies with local legislation regulatory requirements.

Plant performance figures given in this brochure are for illustration purposes only and will vary depending upon various factors, including feed material gradings and characteristics. Information relating to capacity or performance contained within this publication is not intended to be, nor will be, legally binding.

GET IN TOUCH

Dungannon
200 Coalisland Road, Dungannon,
Co Tyrone, BT71 4DR, Northern Ireland
Tel: +44 (0) 28 87 718 500
Fax: +44 (0) 28 87 747 231

Louisville
11001 Electron Drive,
Louisville, Kentucky, 40299 USA
Tel: +1 502 736 5200
Fax: +1 502 736 5202

www.powerscreen.com