TECHNICAL
SPECIFICATION

EVOQUIP®
A TEREX BRAND



T-LINK
RECORD, DISPLAY
AND ANALYSE DATA

HLF 50
HIGH LEVEL FEEDER

HLF 50 HIGH LEVEL FEEDER

OVERVIEW

Total Weight	12,500kg (27,558bs) - Standard Unit	
Transport	Length	12.16m (39' 11")
	Height	2.55m (8' 4")
	Width	2.29m (7' 6")
Working @ 24º	Length	18.2m (59' 9")
	Height	7.37m (24' 2")
	Width	2.29m (7' 6")
Power Unit	Tier 3: CAT 4.4 62kW (83hp) or, Stage V: CAT 2.2 55kW (74hp)	

NOTE: Dimensions may differ slightly from sales drawings due to differences in angles / reference points.

FEATURES & BENEFITS

- High capacity up to 450tph (496 US tph).
- Maximum feed size up to 150mm (6").
- Eliminates the need for wheeled loaders to create stockpiles - reduces labour and maintenance costs.
- Eliminates the need for handling material multiple times - reduces labour and maintenance costs.
- Improved material quality due to reduced compaction, degradation, segregation and contamination.
- Can except loads from an excavator, wheeled loader, crusher or screener.
- Multiple hopper options available depending on required capacities and operators loading methods or application.
- Rapid set up time and manoeuvrability around site.
- Reduced fuel consumption due to reduced reliance on wheeled loaders.
- Reduced wear on wheeled loaders where a conveyor is utilised.
- Hydraulic discharge height adjustment.
- Hydraulic fold over for transport.
- Rosta scraper.
- Discharge conveyor head drum bearing automatic greasing.
- External conveyor belt adjustment.
- Engine pre-start delay & siren.
- Emergency stops x 3.



HLF 50 HIGH LEVEL FEEDER

HOPPER & GRID

Grip Opening:	3855mm (12′ 8″) x 1995mm (6′ 7″)
Target Area (Without Grid):	3468mm (11′ 5″) x 1438mm (4′ 9″)
Grid Apertures:	108mm (4″)
Optional Grid Apertures:	100mm (4″), 126mm (5″), 151mm (6″)
Capacity (Tipping Grid Fitted):	3.8m³ (4.97 Cu.Yd.)
Capacity (No Tipping Grid Fitted):	4.2m³ (5.5 Cu.Yd.)
Rear Feed In Height Without Tipping Grid:	2.28m (7′ 6″)
Rear Feed In Height With Tipping Grid:	2.76m (9′ 1″)



FEED CONVEYOR

Width:	1050mm (42″)
Belt Type:	Plain
Belt Spec:	EP400/3 4+2
Variable Speed:	Yes

DISCHARGE CONVEYOR

Width:	1050mm (42″)
Belt Centres:	15.6m (51′ 2″)
Belt Type:	Plain
Belt Spec:	EP400 3 4+2
Drive Drum Dia:	286mm (11.3″)
Tail Drum Dia:	270mm (10.6″)
Max Belt Speed:	109m/m
Motor Size:	500cc
Operating Angle:	0º - 24º
Discharge Height @18º:	5.9m (19′ 4″)
Stockpile Capacity @18º & 37º Angle of Repose:	290m³ (379 Cu.Yd)
Discharge Height @24º:	7.2m (23′ 8″)
Stockpile Capacity @24º & 37º Angle of Repose:	583m³ (762 Cu.Yd)
Variable Speed:	Yes



TRACKS

Shoe Width:	300mm (1′)
Sprocket Centre:	3434mm (11′ 3″)
Outer Width:	2292mm (7′ 6″)
Gradability:	39.2º
Speed:	0.8km/h
Speed High:	1.5km/h
Speed High:	63Lpm (Per track)



POWER UNIT & HYDRAULICS

Engine (Tier 3):	CAT C4.4
Power Rating:	62kW (83hp)
RPM:	2300rpm
Crankshaft Pump:	29/29/19
Engine (Stage V):	CAT C2.2
Power Rating:	55kW (74hp)
RPM:	2300rpm
Crankshaft Pump:	29/29/19
Diesel Tank Capacity:	145L (38 US GAL)
Hydraulic Tank Capacity:	300L (79 US GAL)

NOTE: Stage V engine option is Dual Certified to include the USA

SINGLE DECK VIBRATING GRID

Type of Grid:	3.1m x 2.45m (10′ 2″ x 8′) Single Deck Vibrating Grid
Target Area:	3.84m x 2.1m (12′ 7″ x 6′ 11″)
Grid Opening:	3.03m x 2.17m (9′ 11″ x 7′ 1″)
Top Deck Type:	Tapered Bofor Bar
Standard Aperture:	90mm tapering to 110m (4″)
Optional Apertures:	110mm - 130mm (5″)
Working Angle:	4º - 14º
Tip Angle:	43º
Rear Feed In Height:	3483mm (11′ 5″) @ 12º / 3560mm (13′ 7″) @ 14º
Weight:	5450kg (12,015lbs)
Speed:	1050rpm
Throw:	4.5mm
G Force:	2.77G
Increase In Transport Height:	+820mm (2′ 8″)

OPTIONS

- Dust hood.
- Canvas dust covers complete with dust hood on discharge conveyor.
- Full length skirting rubber along discharge conveyor.
- High spec head drum scraper on discharge conveyor (plain belt only).
- Anti-roll back flaps.
- Heavy duty plain discharge belt EP500 3 Ply x 5 + 2 covers.
- Discharge conveyor under guard for mid-section.
- Spray bar at head drum.
- Belt weigher.
- Overband magnet on discharge conveyor complete with hydraulic kit and support frames.
- Radio remote to start / stop feeder, start / stop discharge conveyor and tracking.
- Radio remote to raise / lower discharge conveyor & tipping grid.
- Pull cord E-Stop running the length of the conveyor.
- 12ft tipping grid 4″, 5″ or 6″ grid cassette
- 500mm (20″) hopper extensions with fall break system in hopper.
- 700mm (28″) hopper extensions with fall break system in hopper.
- Machine prepped hydraulically to tip a grid including remote control (no grid supplied).
- Machine prepped hydraulically for SDVG including remote control (no SDVG supplied).
- Discharge conveyor chevron belt EP315 3 ply 3 + 1.5 covers.
- Grade ISO 68 hydraulic oil (recommended for ambient temperatures between +15 and +50 degrees Celsius).
- Grease lines to head drum.

HLF 50 HIGH LEVEL FEEDER

WORKING DIMENSIONS

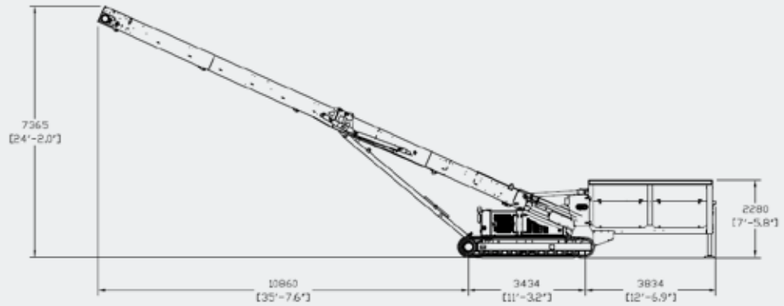

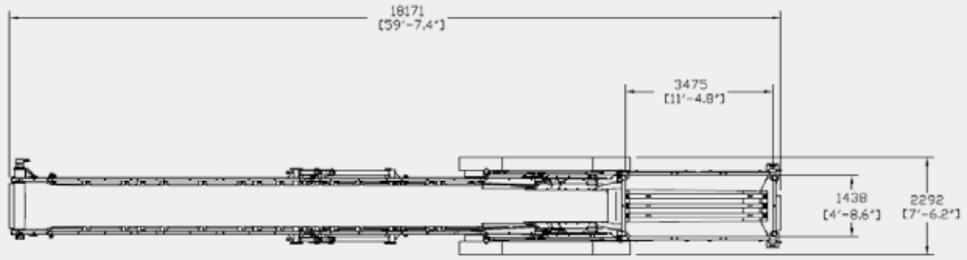

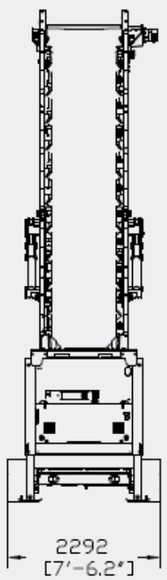

TRANSPORT DIMENSIONS

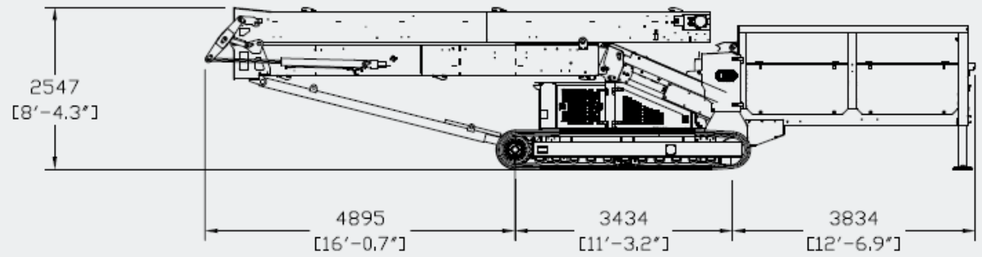

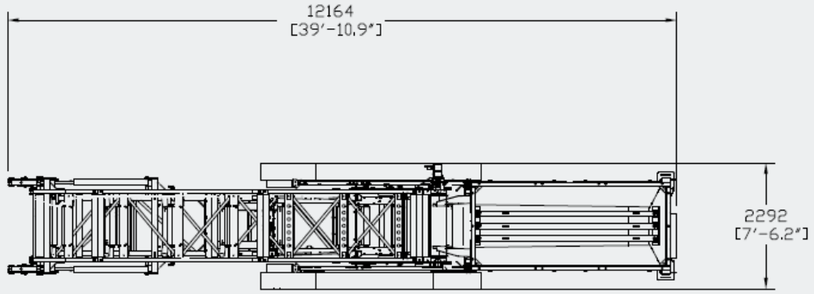

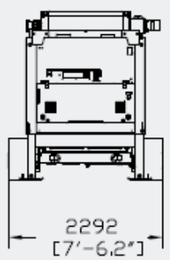



200 Coalisland Road,
Dungannon, Co. Tyrone, BT714DR
Tel: +442887718500
Email: EvoQuip@terex.com

terex.com/EvoQuip

The material in this document is for information only and is subject to change without notice.
Terex assumes no liability resulting from errors or omissions in this document, or from the use of the information contained herein.
Due to continual product development we reserve the right to change specifications without notice.
Photographs are for illustrative purposes only, some or all of the machines in the illustrations may be fitted with optional extras.
Copyright 2021 Terex GB Limited.
Published and Printed in November 2021.