TECHNICAL
SPECIFICATION

EVOQUIP®
A TEREX BRAND



T-LINK
RECORD, DISPLAY
AND ANALYSE DATA

HLF75
ORBITAL FEEDER

HLF75 ORBITAL FEEDER

OVERVIEW

Total Weight	29,300kg (64,595lbs)	
Transport	Length	19.5m (63’)
	Height	3.63m (11’ 11”)
	Width	3.2m (10’ 6”)
Working @ 24º	Length	25.5m (83’ 7”)
	Height	10.9m (35’ 9”)
	Width	3.2m (10’ 6”)
Power Unit	Tier 3: CAT 4.4 83kW (111hp) or, Tier 4F: CAT 4.4 82kW (110hp) or, Stage V: CAT 3.6 82kW (110hp)	

NOTE: Dimensions may differ slightly from sales drawings due to differences in angles / reference points.

FEATURES & BENEFITS

- High capacity up to 600tph (661 US tph).
- Maximum feed size up to 150mm (6”).
- 360 degree stockpiling capability - increased stockpiling capacity without the need to move the machine.
- Transverse loading for rail cars and barges.
- Radio remote control to stop / start feeder, raise / lower conveyor, slew & track machine.
- Eliminates the need for wheeled loaders to create stockpiles - reduces labour and maintenance costs.
- Eliminates the need for handling material multiple times - reduces labour and maintenance costs.
- Improved material quality due to reduced compaction, degradation, segregation and contamination.
- Can except loads from an excavator, wheeled loader, crusher or screener.
- Multiple hopper options available depending on required capacities and operators loading methods or application.
- Rapid set up time and manoeuvrability around site.
- Reduced fuel consumption due to reduced reliance on wheeled loaders.
- Reduced wear on wheeled loaders where a conveyor is utilised.
- Hydraulic discharge height adjustment.
- Hydraulic fold over for transport.
- Rosta scraper.
- Kick out sensor stops feeder if discharge belt is under extreme load.
- Pinless deployment.
- Discharge conveyor head drum bearing automatic greasing.
- External conveyor belt adjustment.
- Engine pre-start delay & siren.
- Emergency stops x 3.

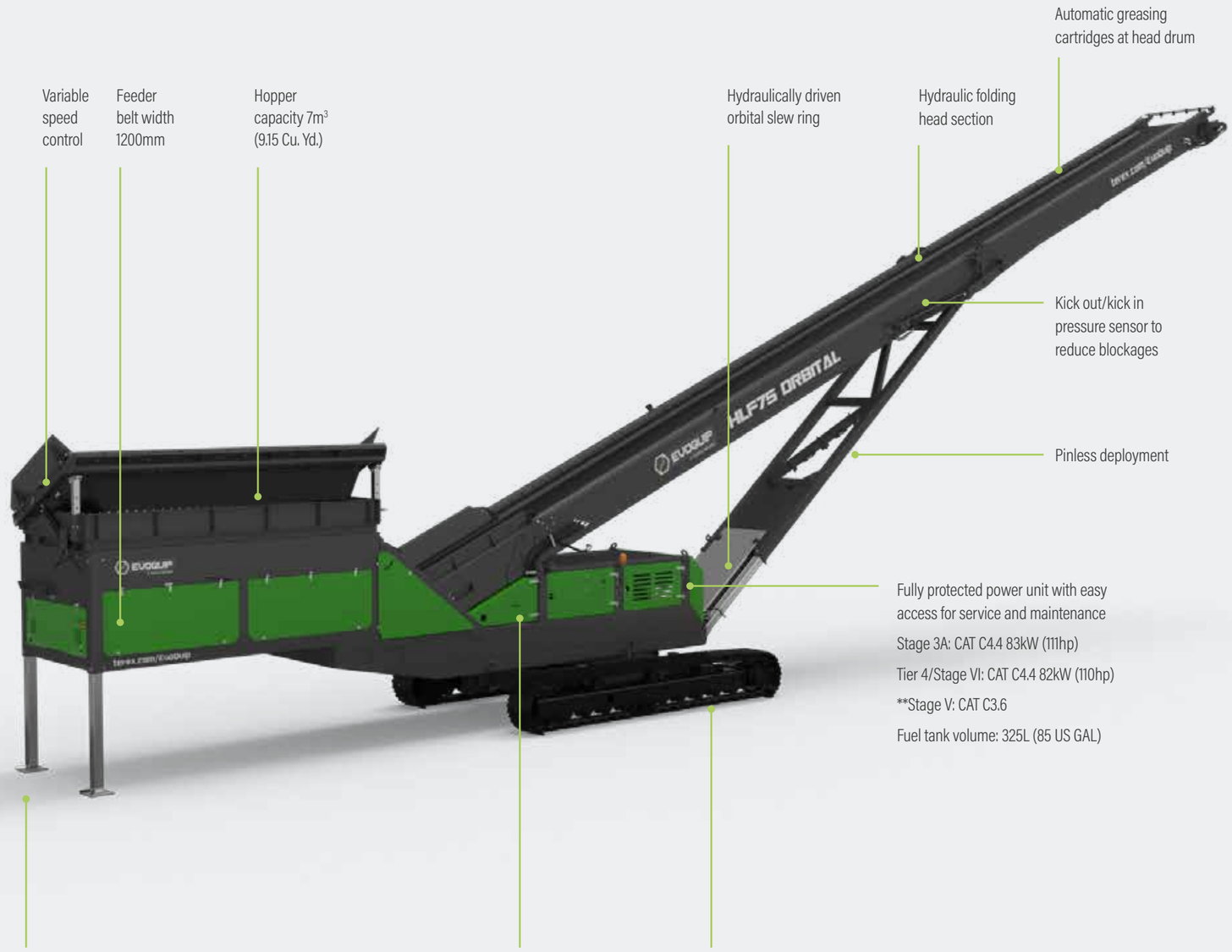

HLF75 ORBITAL FEEDER

HOPPER & GRID

Grip Opening:	4750mm (15′ 7″) x 2150mm (7′ 1″)
Target Area (Without Grid):	4100mm (13′ 5″) x 1633mm (5′ 5″)
Grid Apertures:	108mm (4″)
Optional Grid Apertures:	73mm (3″), 126mm (5″), 151mm (6″)
Capacity (Tipping Grid Fitted):	7m³ (9.15 Cu.Yd.)
Capacity (No Tipping Grid Fitted):	6.4m³ (8.4 Cu.Yd.)
Feed In Height Without Tipping Grid:	3.06m (10′)
Feed In Height With Tipping Grid:	3.75m (12′ 4″)



FEED CONVEYOR

Width:	1200mm (48″)
Belt Type:	Plain
Belt Spec:	EP400/3 4+2
Variable Speed:	Yes

DISCHARGE CONVEYOR

Width:	1200mm (48″)
Belt Centres:	22.5m (73′ 10″)
Belt Type:	Plain
Belt Spec:	EP400 3 4+2
Drive Drum Dia:	345mm (13.6″)
Tail Drum Dia:	320mm (12.6″)
Max Belt Speed:	113m/m
Motor Size:	630cc
Operating Angle:	5º - 24º
Discharge Height @18º:	8.8m (28′ 2″)
Stockpile Capacity @18º & 37º Angle of Repose:	1047m³ (1369 Cu.Yd)
Discharge Height @24º:	10.7m (34′ 6″)
Stockpile Capacity @24º & 37º Angle of Repose:	1957m³ (2560 Cu.Yd)
Variable Speed:	Yes



TRACKS

Shoe Width:	400mm (1′ 4″)
Sprocket Centre:	4300mm (14′ 1″)
Outer Width:	3200mm (10′ 6″)
Gradability:	45.9º
Speed:	0.6km/h
Speed High:	1.1km/h
Speed High:	68Lpm (Per track)



POWER UNIT & HYDRAULICS

Engine (Tier 3):	CAT C4.4
Power Rating:	83kW (111hp)
RPM:	1800rpm
Crankshaft Pump:	38/38/8
Engine (Tier 4F):	CAT C4.4
Power Rating:	82kW (110hp)
RPM:	1800rpm
Crankshaft Pump:	38/38/8
Engine (Stage V):	CAT C3.6
Power Rating:	82kW (110hp)
RPM:	1800rpm
Crankshaft Pump:	38/38/8
Diesel Tank Capacity:	325L (86 US GAL
Hydraulic Tank Capacity T3:	360L (95 US GAL
Hydraulic Tank Capacity T4:	360L (95 US GAL)

DOUBLE DECK VIBRATING GRID

Type of Grid:	3.1m x 2.45m (10′ 2″ x 8′) 2 Deck Vibrating Grid
Target Area:	3.91m x 2.42m (12′ 9″ x 7′ 11″)
Grid Opening:	3.03m x 2.17m (9′ 11″ x 7′ 1″)
Top Deck Type:	Tapered Bofor Bar
Standard Aperture:	90mm tapering to 110m (4″)
Optional Apertures:	110mm - 130mm (5″)
Bottom Deck Type:	Woven steel mesh
Standard Aperture:	38mm (1.5″)
Working Angle:	10º - 20º
Tip Angle:	45º
Rear Feed In Height:	4220mm (13′ 10″) @ 10º / 4750mm (15′) @ 20º
Weight:	5500kg (12,125lbs)
Speed:	1050rpm
Throw:	4.5mm
G Force:	2.77G
Increase In Transport Height:	+744mm (2′ 7″)

OPTIONS

- Dust hood.
- Canvas dust covers complete with dust hood on discharge conveyor.
- Twin drive discharge conveyor.
- Full length skirting rubber along discharge conveyor.
- High spec head drum scraper on discharge conveyor (plain belt only).
- Anti-roll back flaps.
- Heavy duty plain belt EP500 4 ply x 8 + 2 covers
- Chevron belt EP315 3 ply x 3 + 1.5 covers.
- Ceramic lagging on discharge conveyor drive drum (recommended if twin drive option is selected).
- Ceramic lagging on feed conveyor drive drum.
- Discharge conveyor under guard for mid-section.
- Dust suppression (spray bars only).
- Belt weigher.
- Overband magnet on discharge conveyor with hydraulic kit and support frames.
- Grease lines to head drum.
- Pull cord E-Stop running the length of the conveyor.
- 6mm mild steel liners bolted into hopper.
- 6mm AR400 steel wear liners in hopper.
- Feedboot lined with 6mm AR400 wear plate.
- Twin drive feed conveyor.
- 4″ or 6″ tipping grid fitted to feed conveyor.
- Integrated fall break system bolted into hopper.
- 500mm (20″) hopper extensions with fall break system in hopper.
- 700mm (28″) hopper extensions with fall break system in hopper.
- Machine prepped hydraulically to tip a grid including remote control (no grid supplied).
- Machine prepped hydraulically for DDVG including remote control (no DDVG supplied).
- Grade ISO 68 hydraulic oil (recommended for ambient temperatures between +15 and +50 degrees Celsius).

HLF75 ORBITAL FEEDER

WORKING DIMENSIONS

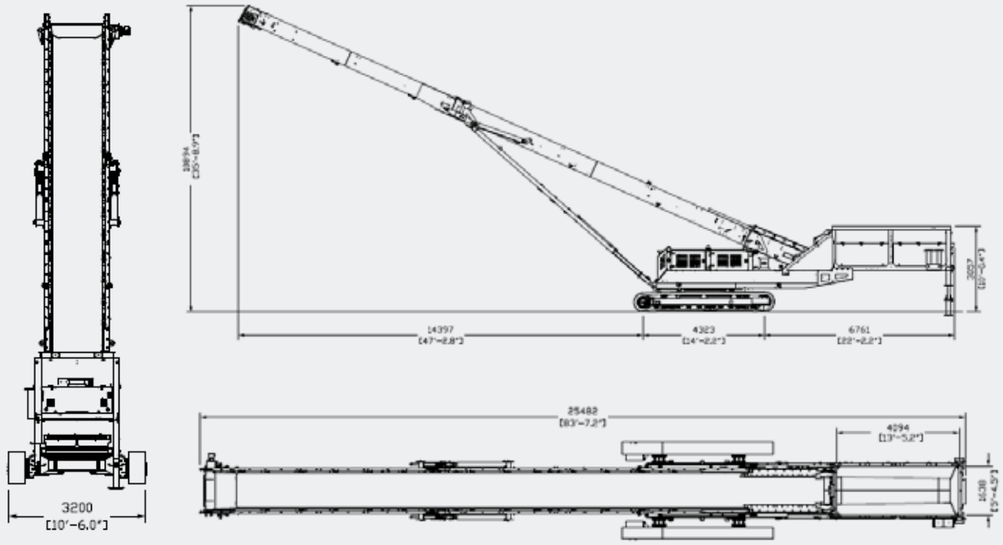

(Double Deck Vibrating Grid)

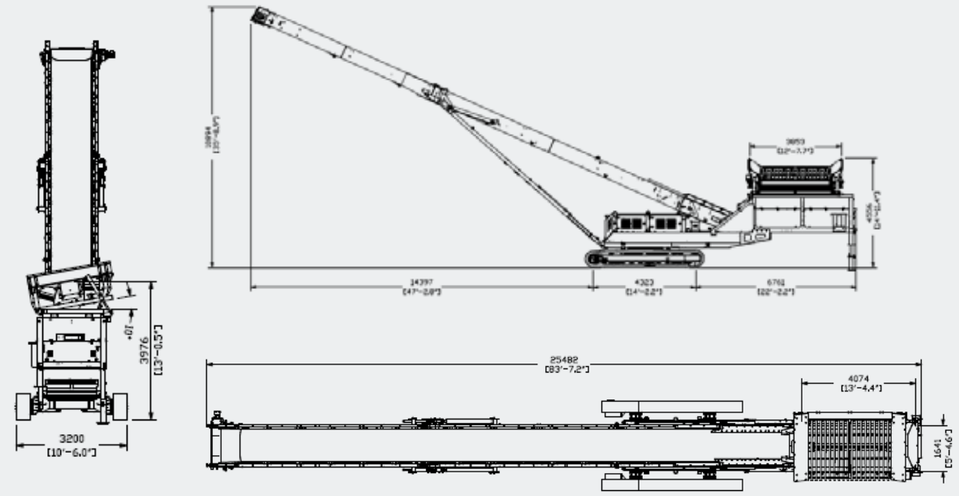

TRANSPORT DIMENSIONS

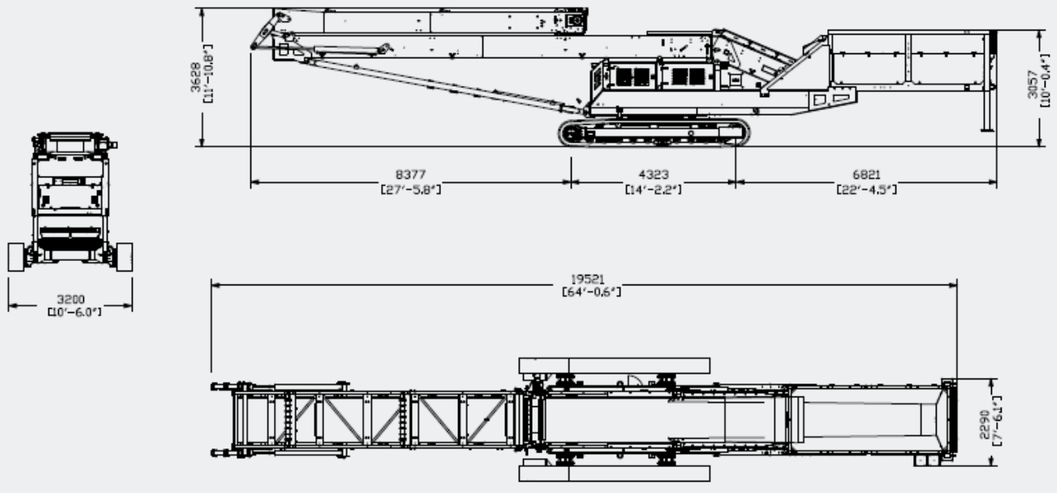

(Double Deck Vibrating Grid)

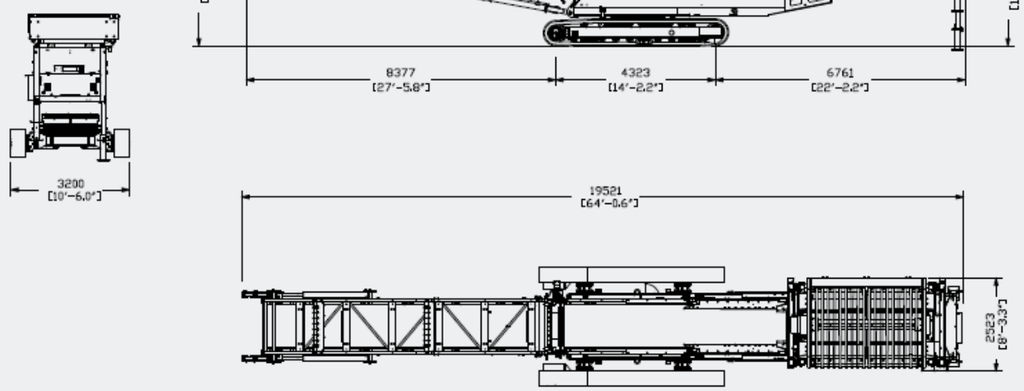



200 Coalisland Road,
Dungannon, Co. Tyrone, BT714DR
Tel: +442887718500
Email: EvoQuip@terex.com

terex.com/EvoQuip

The material in this document is for information only and is subject to change without notice.
Terex assumes no liability resulting from errors or omissions in this document, or from the use of the information contained herein.
Due to continual product development we reserve the right to change specifications without notice.
Photographs are for illustrative purposes only, some or all of the machines in the illustrations may be fitted with optional extras.
Copyright 2021 Terex GB Limited.
Published and Printed in November 2021.