POWERSCREEN®
HORIZON 6203R
3 DECK HORIZONTAL SCREEN

POWERSCREEN®
A TEREX BRAND

GET STARTED

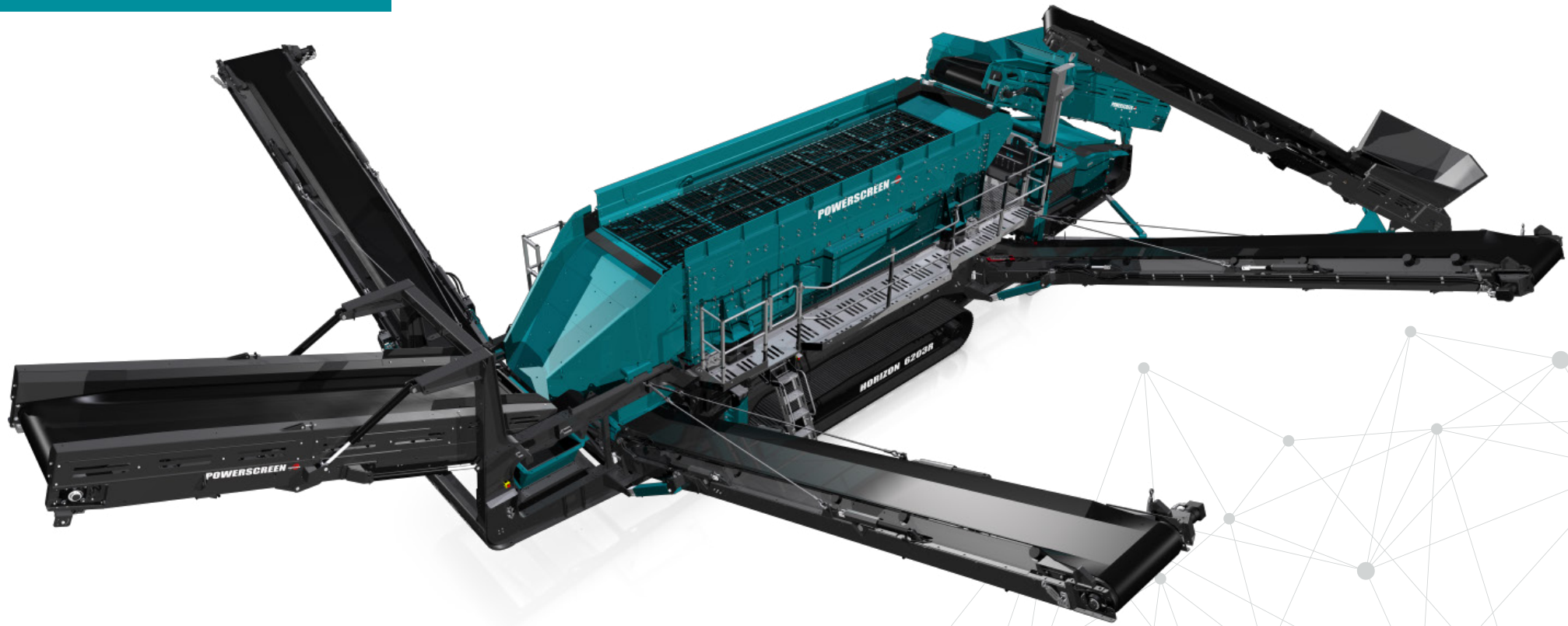

TECHNICAL SPECIFICATION - REV 8. 01/01/2019

To use my interactive features I need to be opened in 'Adobe Acrobat Reader' click here to download



HORIZON 6203R

- OVERVIEW
- HOPPER
- BELT FEEDER
- SCREENBOX
- POWER UNIT
- CRAWLER TRACK DATA
  - CONVEYORS - UNDERSCREEN
  - CONVEYORS - SIDE CONVEYORS
  - CONVEYORS - TAIL & CROSS
  - CONVEYORS - RECIRCULATING
- OTHER OPTIONS
- POWERSCREEN® PULSE
- DIMENSIONS

OVERVIEW

SPECIFICATION

Total weight	45,000kg (99,208lbs)	
Transport	**Length**	18.99m (62’ 4”)
	Height	3.6m (11’ 10’’)
	Width	3.2m (10’ 6”)
Working	**Length**	20.86m (68’ 5”)
	Height	4.64m (15’ 3”)
	Width	16.27m (53’ 5”)
Screenbox:	6.1m x 1.93m (20’ x 6’ 4’’)	
Power Unit	Diesel / Hydraulic	
Plant Colour	RAL 5021, RAL 7024 & RAL 9005	

(Weight & dimensions are approximate base unit values)

FEATURES & BENEFITS

- High capacity up to 800 tph / 881 US tph (depending on media sizes & material type)
- Maximum feed size 250mm (10’’). Maximum allowable feed size may vary depending on material type and screenbox media
- Quick set-up time
- Maximum mobility with heavy duty, low ground pressure crawler tracks
- Removable heavy duty pendant remote control system
- Optional radio control system available if required
- High performance hydraulics system
- Galvanised maintenance platforms on both sides of screen
- Hydraulically folding for transport
- Heavy duty triple shaft horizontal screenbox with adjustable stroke, angle & speed
- Direct feed hopper with impact bars and rollers
- Recirculating oversize capacity tailored for crushing applications
- Roll-in chute system

APPLICATIONS

Aggregate
Sand & gravel
Blasted rock
River rock

Recycling
Top soil
C&D waste
Composed materials
Wood by-products
Overburden
Foundry waste

Mining
Processed ores
Processed minerals



HORIZON 6203R

- OVERVIEW
- HOPPER
- BELT FEEDER
- SCREENBOX
- POWER UNIT
- CRAWLER TRACK DATA
  - CONVEYORS - UNDERSCREEN
  - CONVEYORS - SIDE CONVEYORS
  - CONVEYORS - TAIL & CROSS
  - CONVEYORS - RECIRCULATING
- OTHER OPTIONS
- POWERSCREEN® PULSE
- DIMENSIONS

HOPPER

Target area: 5.8m (19') long x 2.55m (8' 4") wide
Hopper capacity: 4.33m³ (5.67 cu. yd.)
Feed in height: 2.82m (9' 3")
Replaceable wear resistant steel panel liners

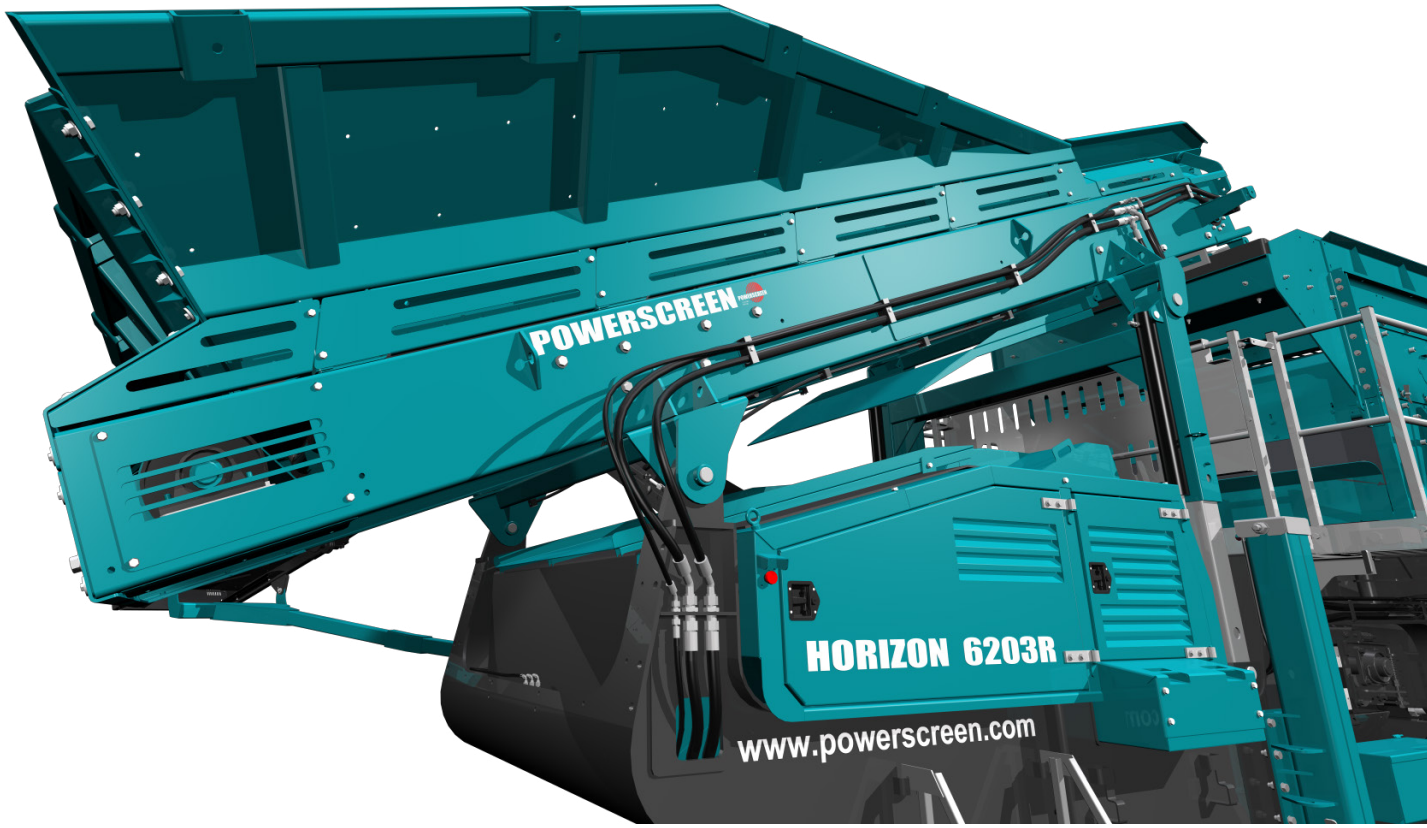



HORIZON 6203R

- OVERVIEW
- HOPPER
- BELT FEEDER
- SCREENBOX
- POWER UNIT
- CRAWLER TRACK DATA
  - CONVEYORS - UNDERSCREEN
  - CONVEYORS - SIDE CONVEYORS
  - CONVEYORS - TAIL & CROSS
  - CONVEYORS - RECIRCULATING
- OTHER OPTIONS
- POWERSCREEN® PULSE
- DIMENSIONS

BELT FEEDER

1300mm (4’ 3”) 4 ply plain trough belt
Direct drive system with twin direct gearboxes
Variable speed control
Impact bars at inlet impact section
Heavy duty belt feeder option available





HORIZON 6203R

- OVERVIEW
- HOPPER
- BELT FEEDER
- SCREENBOX
- POWER UNIT
- CRAWLER TRACK DATA
  - CONVEYORS - UNDERSCREEN
  - CONVEYORS - SIDE CONVEYORS
  - CONVEYORS - TAIL & CROSS
  - CONVEYORS - RECIRCULATING
- OTHER OPTIONS
- POWERSCREEN® PULSE
- DIMENSIONS

SCREENBOX

6.1m x 1.93m (20' x 6' 4'') All 3 decks
3 deck triple shaft horizontal screenbox
Oval stroke adjustable up to maximum of 19mm
Oval stroke angle adjustable from 30º - 60º

Breaker-box with wear resistant steel replaceable wearplate
Hi-torque screen motor mounted direct to screenbox
Pulley driven
Marshmallow springs
Wear plates on pipeunits
Side tensioned all decks
Quick release wedge tensioning system (optional depending on screen media)

Roll-in chute system with removable panels
offering blending options between upper midsize & lower midsize





HORIZON 6203R

- OVERVIEW
- HOPPER
- BELT FEEDER
- SCREENBOX
- POWER UNIT
- CRAWLER TRACK DATA
  - CONVEYORS - UNDERSCREEN
  - CONVEYORS - SIDE CONVEYORS
  - CONVEYORS - TAIL & CROSS
  - CONVEYORS - RECIRCULATING
- OTHER OPTIONS
- POWERSCREEN® PULSE
- DIMENSIONS

POWER UNIT & HYDRAULICS

Engine Tier 3 Equivalent:	Tier 3 / Stage IIIA - CAT C6.6
Performance:	151 kW (202hp) @ 2200rpm
Engine Tier 4F / Stage IV:	Tier 4F/ Stage IV CAT C7.1
Performance:	151 kW (202hp) @ 2200rpm

Tank capacity

Fuel:	597 L (158 US Gal)
Hydraulic Oil:	780 L (206 US Gal)

Pumps

Flywheel pump:	Cast iron quad 63/63/32/32cc/rev
PTO pump:	Cast iron tandem 29/29cc/rev

Motors

Belt feeder:	80cc/rev x 2
Under screen conveyor:	630cc/rev
Finessize conveyor:	500cc/rev
Upper midsize conveyor:	500cc/rev
Lower midsize conveyor:	500cc/rev
Oversize conveyor:	400cc/rev
Screen:	93cc/rev bent axis
Auxiliary conveyor:	500cc/rev





HORIZON 6203R

- OVERVIEW
- HOPPER
- BELT FEEDER
- SCREENBOX
- POWER UNIT
- CRAWLER TRACK DATA
  - CONVEYORS - UNDERSCREEN
  - CONVEYORS - SIDE CONVEYORS
  - CONVEYORS - TAIL & CROSS
  - CONVEYORS - RECIRCULATING
- OTHER OPTIONS
- POWERSCREEN® PULSE
- DIMENSIONS

TRACKS

Track width: 500mm (1’8’’)
Sprocket centres: 3836mm (12’ 7’’)
Gradability degrees: 26°
Two speed tracks
High: 1.1kph (0.68mph)
Low: 0.55kph (0.34mph)
Flow rate: 134 Lpm

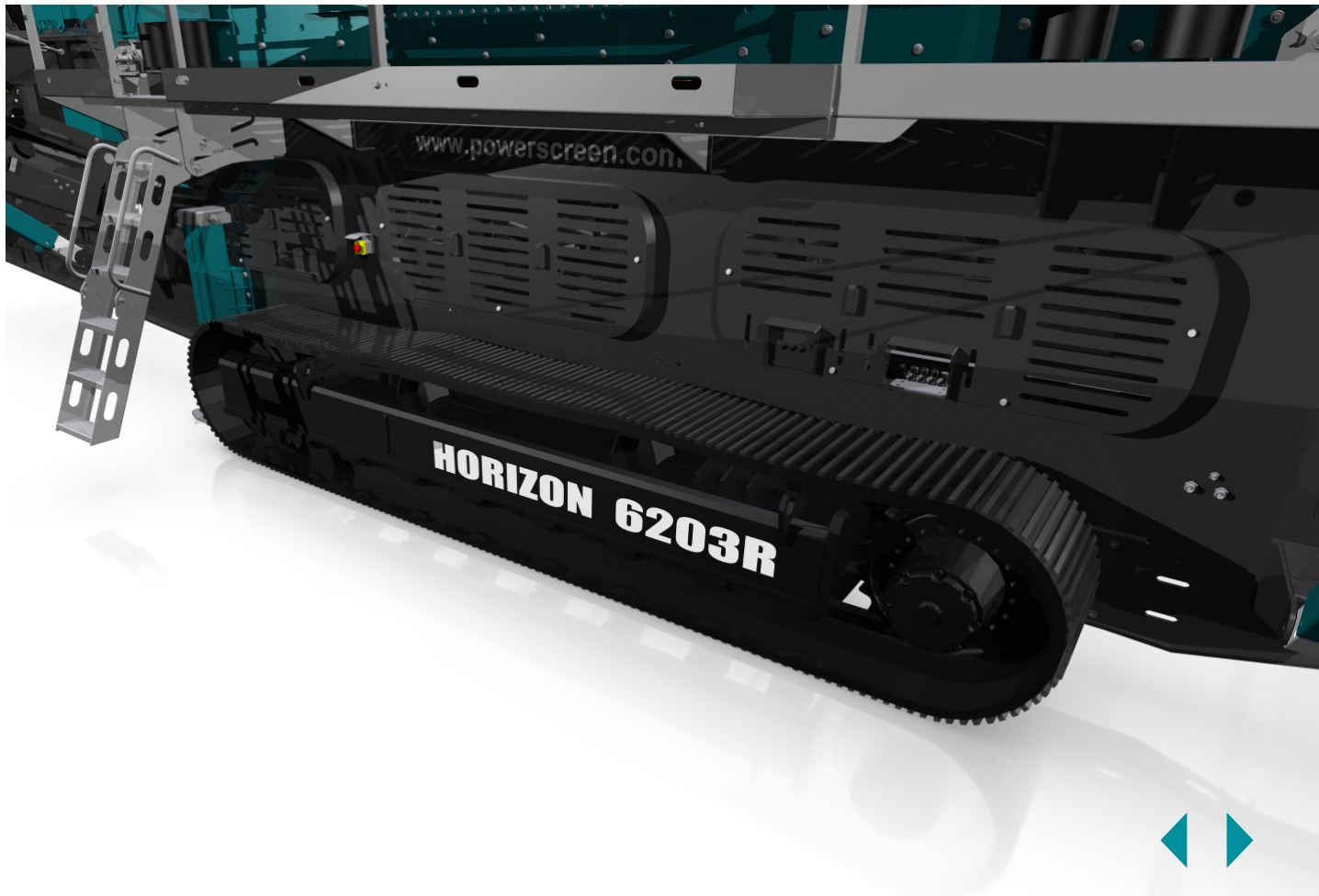



HORIZON 6203R

- OVERVIEW
- HOPPER
- BELT FEEDER
- SCREENBOX
- POWER UNIT
- CRAWLER TRACK DATA
  - CONVEYORS - UNDERSCREEN
  - CONVEYORS - SIDE CONVEYORS
  - CONVEYORS - TAIL & CROSS
  - CONVEYORS - RECIRCULATING
- OTHER OPTIONS
- POWERSCREEN® PULSE
- DIMENSIONS

CONVEYORS - UNDERSCREEN

UNDERSCREEN CONVEYOR

1500mm (4' 11") 3 ply plain belt
Direct drive system
Variable speed control

Drum centres:	6.25m (20' 6")
Drum diameter (drive):	270mm (10.6")
Drum diameter (tail):	270mm (10.6")



HORIZON 6203R

- OVERVIEW
- HOPPER
- BELT FEEDER
- SCREENBOX
- POWER UNIT
- CRAWLER TRACK DATA
  - CONVEYORS - UNDERSCREEN
  - CONVEYORS - SIDE CONVEYORS
  - CONVEYORS - TAIL & CROSS
  - CONVEYORS - RECIRCULATING
- OTHER OPTIONS
- POWERSCREEN® PULSE
- DIMENSIONS

CONVEYORS - SIDE CONVEYORS

FINESIZE - SIDE CONVEYOR

900mm (2' 11") 3 ply plain belt

Angle adjustment:	14º - 25º
Stockpile height:	4.3m (14' 1'')
Stockpile capacity:	119m³ (156 cu. yd.)

Hydraulically folding
Impact bars under feedboot
Direct drive system
Variable speed control

Drum centres:	9.5m (31' 2")
Drum diameter (drive):	286mm (11.3")
Drum diameter (tail):	203mm (8")

OVERSIZE - SIDE CONVEYOR

900mm (2' 11") 3 ply plain belt

Angle adjustment:	14º - 25º
Stockpile height:	4.4m (14' 5'')
Stockpile capacity:	128m³ (167 cu. yd.)

Wear resistant steel lined feed chute
Direct drive system
Variable speed control
Hydraulically folding
Impact bars under feedboot

Drum centres:	6.9m (22' 8")
Drum diameter (drive):	286mm (11.3")
Drum diameter (tail):	270mm (10")

MID-FINESIZE - SIDE CONVEYOR

900mm (2' 11") 3 ply plain belt

Angle adjustment:	14º - 25º
Stockpile height:	4.4m (14' 5'')
Stockpile capacity:	129m³ (166 cu. yd.)

Hydraulically folding
Impact bars under feedboot
Direct drive system
Variable speed control

Drum centres:	8.92m (29' 3")
Drum diameter (drive):	286mm (11.3")
Drum diameter (tail):	203mm (8")





HORIZON 6203R

- OVERVIEW
- HOPPER
- BELT FEEDER
- SCREENBOX
- POWER UNIT
- CRAWLER TRACK DATA
  - CONVEYORS - UNDERSCREEN
  - CONVEYORS - SIDE CONVEYORS
  - CONVEYORS - TAIL & CROSS
  - CONVEYORS - RECIRCULATING
- OTHER OPTIONS
- POWERSCREEN® PULSE
- DIMENSIONS

CONVEYORS - TAIL & CROSS CONVEYOR

MID-OVERSIZE - TAIL CONVEYOR

900mm (2' 11") 3 ply plain belt

Angle adjustment: 14^0 - 25^0
Stockpile height: 4.3m (14' 1'')
Stockpile capacity: 119m³ (156 cu. yd.)

Hydraulically folding
Impact bars under feedboot
Direct drive system
Variable speed control

Drum centres: 9.5m (31' 2")
Drum diameter (drive): 286mm (11.3")
Drum diameter (tail): 203mm (8")

MID-OVERSIZE - TAIL CONVEYOR

800mm (2' 7") 3 ply plain trough belt

Hydraulic slide to enable screen mesh access
Variable speed control

Drum centres: 1.92m (6' 4")
Drum diameter (drive): 223mm (8.8")
Drum diameter (tail): 203mm (8")

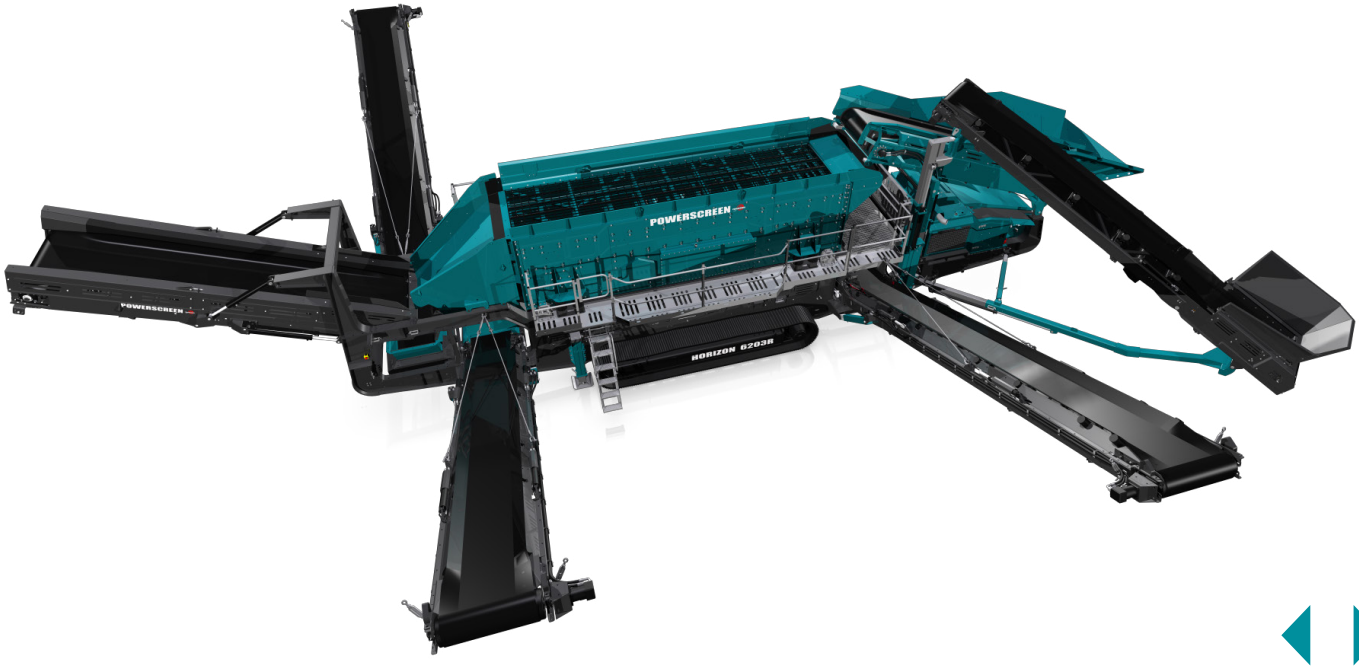



HORIZON 6203R

- OVERVIEW
- HOPPER
- BELT FEEDER
- SCREENBOX
- POWER UNIT
- CRAWLER TRACK DATA
  - CONVEYORS - UNDERSCREEN
  - CONVEYORS - SIDE CONVEYORS
  - CONVEYORS - TAIL & CROSS
  - CONVEYORS - RECIRCULATING
- OTHER OPTIONS
- POWERSCREEN® PULSE
- DIMENSIONS

CONVEYORS - RECIRCULATING

900mm (2' 11") 3 ply chevron belt

Drum centres: 5.83m (19' 2")
Drum diameter (drive): 286mm (11.3")
Drum diameter (tail): 270mm (10")

Used to transfer return product from recirculating crusher back to feeder
Mounted directly to chassis, site mobile
Swivel mounting to suit variety of crushers and enable tracking on site
Direct drive system
Variable speed control





HORIZON 6203R

- OVERVIEW
- HOPPER
- BELT FEEDER
- SCREENBOX
- POWER UNIT
- CRAWLER TRACK DATA
  - CONVEYORS - UNDERSCREEN
  - CONVEYORS - SIDE CONVEYORS
  - CONVEYORS - TAIL & CROSS
  - CONVEYORS - RECIRCULATING
- OTHER OPTIONS
- POWERSCREEN® PULSE
- DIMENSIONS

OTHER OPTIONS

OTHER OPTIONS

- Custom colour machine
- Auto lubrication system
- Radio controlled tracking
- Wear resistant or mild steel punch plate screens
- Roll-in bogie transport system
- Chevron belts
- Hydraulic oil grade 68
- Powerscreen Pulse
- Hinged chute system offering blending options between lower midsize & finesize
- Dual Power System c/w 4.2m (13’ 9’’) track, IE3 Electric motors 75kW (100hp) and 55kW (73hp), diesel engine and integrated control system controlling either diesel-hydraulic or electric-hydraulic functions.



HORIZON 6203R

- OVERVIEW
- HOPPER
- BELT FEEDER
- SCREENBOX
- POWER UNIT
- CRAWLER TRACK DATA
  - CONVEYORS - UNDERSCREEN
  - CONVEYORS - SIDE CONVEYORS
  - CONVEYORS - TAIL & CROSS
  - CONVEYORS - RECIRCULATING
- OTHER OPTIONS
- POWERSCREEN® PULSE
- DIMENSIONS

POWERSCREEN PULSE

RECORD, DISPLAY AND ANALYSE DATA:

HIGH EFFICIENCY THROUGH PRECISE INFORMATION

Available online anywhere and at any time: comprehensive information on the GPS location, start and stop times, fuel consumption, tonnages, cone settings, wear ratings, operating hours, maintenance status, and much more.



AVAILABLE ANYWHERE AND AT ANY TIME

DASHBOARD DISPLAY

FLEET OVERVIEW

WEEKLY REPORT DIRECT TO YOUR INBOX

GPS: MACHINE TRACKING

REPORTING
UTILISATION, PERFORMANCE & PART SPECIFIC





HORIZON 6203R

- OVERVIEW
- HOPPER
- BELT FEEDER
- SCREENBOX
- POWER UNIT
- CRAWLER TRACK DATA
  - CONVEYORS - UNDERSCREEN
  - CONVEYORS - SIDE CONVEYORS
  - CONVEYORS - TAIL & CROSS
  - CONVEYORS - RECIRCULATING
- OTHER OPTIONS
- POWERSCREEN® PULSE
- DIMENSIONS

DIMENSIONS

Figure 1: Horizon 6203R
Working Position

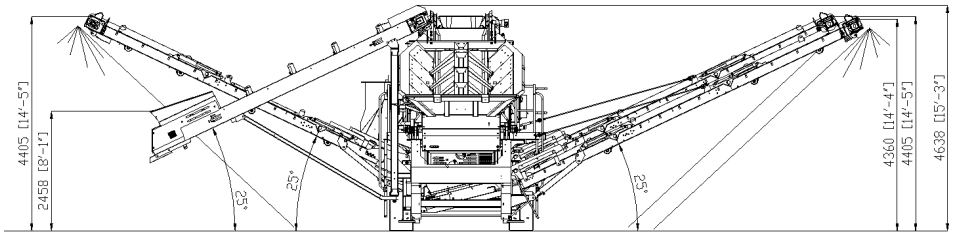

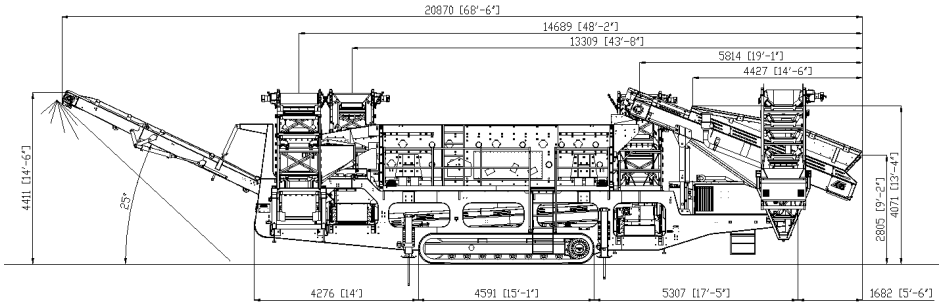

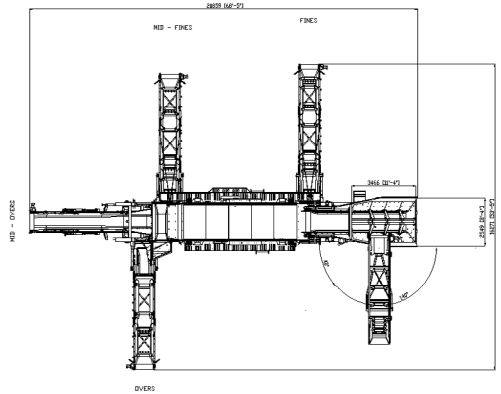

MORE DIMENSIONS OVERLEAF



HORIZON 6203R

- OVERVIEW
- HOPPER
- BELT FEEDER
- SCREENBOX
- POWER UNIT
- CRAWLER TRACK DATA
  - CONVEYORS - UNDERSCREEN
  - CONVEYORS - SIDE CONVEYORS
  - CONVEYORS - TAIL & CROSS
  - CONVEYORS - RECIRCULATING
- OTHER OPTIONS
- POWERSCREEN® PULSE
- DIMENSIONS

DIMENSIONS

Figure 2: Horizon 6203R
Transport Position

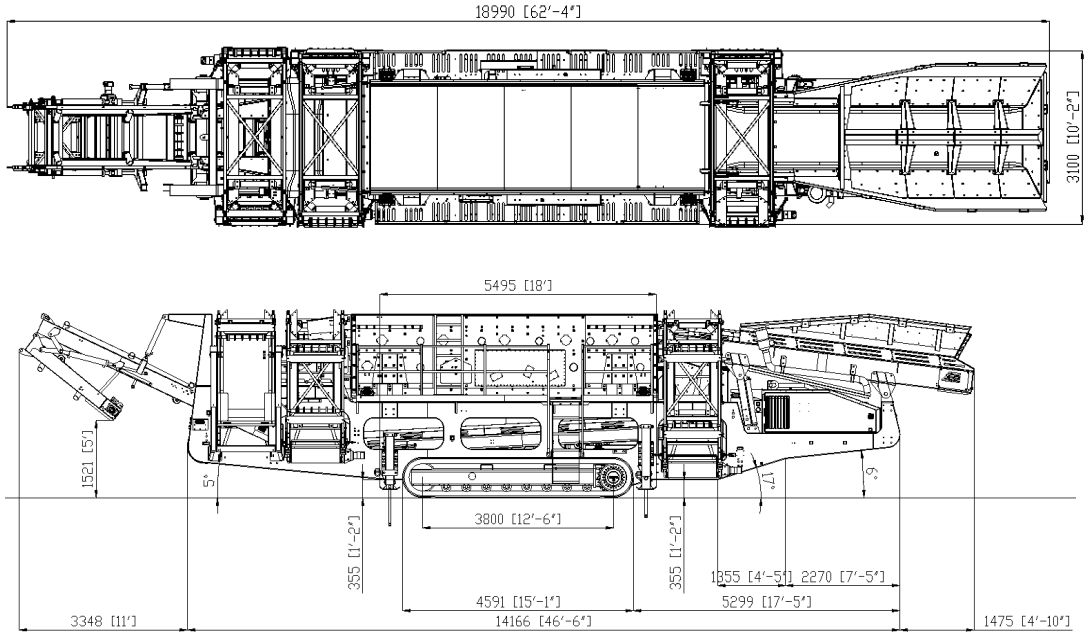

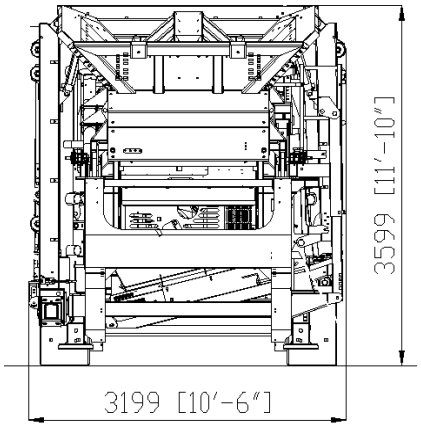

Powerscreen equipment complies with CE requirements.

Please consult Powerscreen if you have any other specific requirements in respect of guarding, noise or vibration levels, dust emissions, or any other factors relevant to health and safety measures or environmental protection needs. On receipt of specific requests, we will endeavour to ascertain the need for additional equipment and, if appropriate, quote extra to contract prices.

All reasonable steps have been taken to ensure the accuracy of this publication, however due to a policy of continual product development we reserve the right to change specifications without notice.

It is the importers' responsibility to check that all equipment supplied complies with local legislation regulatory requirements.

Plant performance figures given in this brochure are for illustration purposes only and will vary depending upon various factors, including feed material gradings and characteristics. Information relating to capacity or performance contained within this publication is not intended to be, nor will be, legally binding.

GET IN TOUCH

Dungannon
200 Coalisland Road, Dungannon,
Co Tyrone, BT71 4DR, Northern Ireland
Tel: +44 (0) 28 87 718 500
Fax: +44 (0) 28 87 747 231

Louisville
11001 Electron Drive,
Louisville, Kentucky, 40299 USA
Tel: +1 502 736 5200
Fax: +1 502 736 5202

www.powerscreen.com