POWERSCREEN®
PHOENIX 1600
WHEELED TROMMEL SCREEN

GET STARTED



TECHNICAL SPECIFICATION - REV 0. 01/10/2019

To use my interactive features I need to be opened in 'Adobe Acrobat Reader' click here to download



PHOENIX 1600 WHEELED

- OVERVIEW
- HOPPER AND BELT FEEDER
- DRUM
- POWER UNIT & HYDRAULICS
- COLLECTION CONVEYOR
- FINES DISCHARGE CONVEYOR
- OVERSIZE CONVEYOR
- BOGIE
- OPTIONS
- POWERSCREEN® PULSE
- DIMENSIONS

OVERVIEW

SPECIFICATION

Total Weight		18,000kg (39,700lbs) - depending on options
Transport	**Length**	16.9m (55' 5'')
	Height	4m (13' 1")
	Width	2.7m (8' 10")
Working	**Length**	25.9m - 27.2m (84' 12" - 89' 3'') - depending on conveyor angle
	Width	15m - 16.8m (49' 3" - 55' 1'') - depending on conveyor angle
	Feed Height	3.5m (11' 6")

Innovatively designed to provide excellent fuel efficiency and low operating costs.

The Powerscreen Phoenix 1600 has been innovatively designed to provide excellent fuel efficiency and low operating costs, whilst also reducing emissions and noise levels due to the machine running at a low engine RPM. With a 4.9m (16') x 1.54m (5') drum, unrivalled production throughput is guaranteed due to the screening area, the largest in its class. Highly versatile the Phoenix 1600 can easily screen a variety of material including topsoil, compost, sand and gravel, wood chip and C&D waste. Woven mesh or heavy duty punch plate panels can be fitted to the drum ensuring all application requirements are met.

The 180° swivel fines conveyor, with a discharge height of 5.87m (19' 3") results in the creation of impressive stockpiles. This swivel feature can be controlled via a remote while the machine is in operation, minimising downtime. The powerful four wheel drive system with high performance friction grip wheels is used to turn the trommel drum giving operators the ability to run bi-directionally.

Powered by a Caterpillar C4.4 engine (Tier 4 Final or Constant Speed) the powerful hydraulics and intelligent feed control system ensure the Phoenix 1600 is always working at its optimum. The low engine RPM coupled with the fuel save (stand-by) mode guarantees peak efficiency. A fifth wheel connection, tandem axel bogie and a quick set up time make the machine easily transportable from site to site.





PHOENIX 1600 WHEELED

- OVERVIEW
- HOPPER AND BELT FEEDER
- DRUM
- POWER UNIT & HYDRAULICS
- COLLECTION CONVEYOR
- FINES DISCHARGE CONVEYOR
- OVERSIZE CONVEYOR
- BOGIE
- OPTIONS
- POWERSCREEN® PULSE
- DIMENSIONS

HOPPER AND BELT FEEDER

- 4.3m³ (5.6yd³) capacity
- 3.7m (12' 2") feeder length
- 900mm (35") 3 ply plain belt, 4 + 2 covers
- Variable speed c/w intelligent feed control
- Hopper extensions

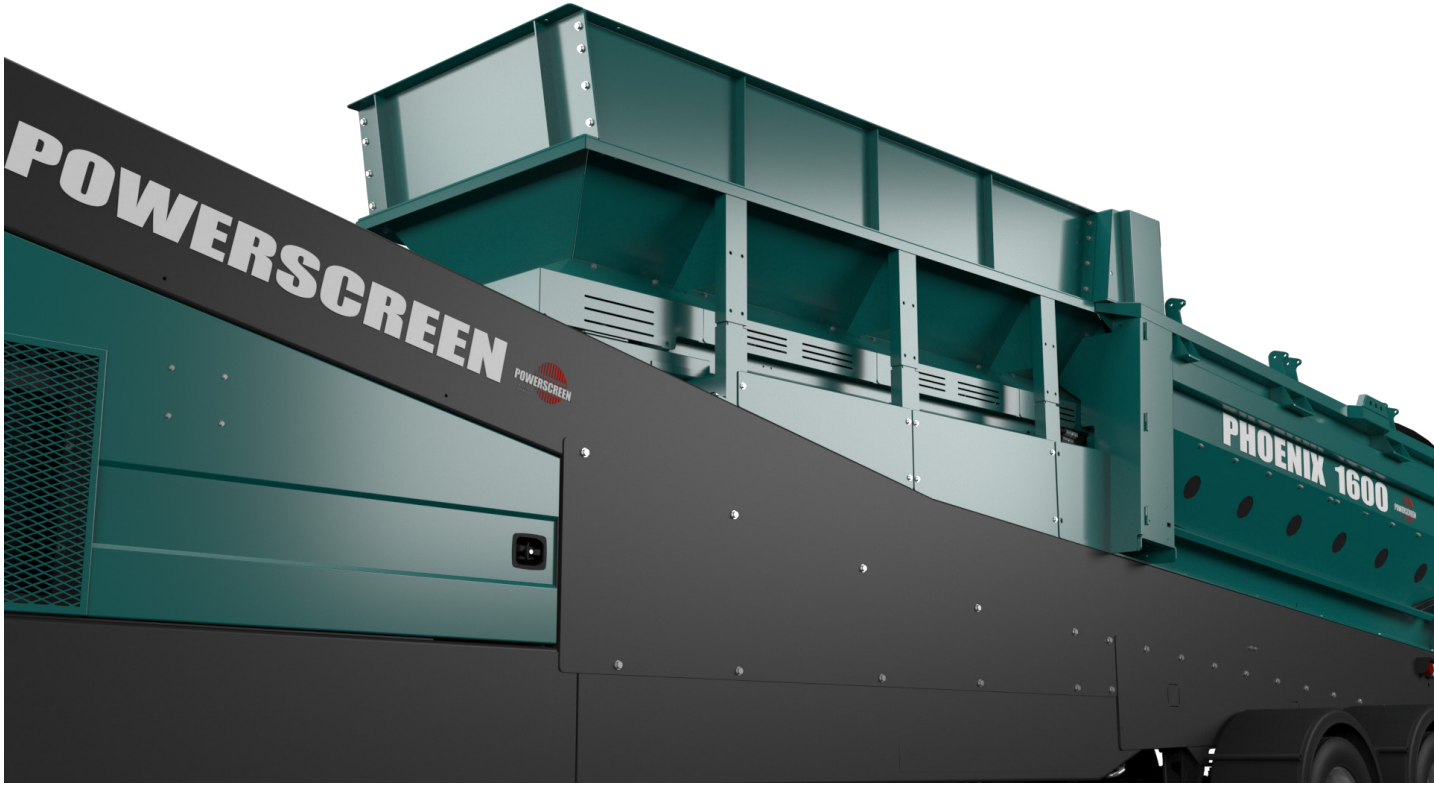



PHOENIX 1600 WHEELED

- OVERVIEW
- HOPPER AND BELT FEEDER
- DRUM
- POWER UNIT & HYDRAULICS
- COLLECTION CONVEYOR
- FINES DISCHARGE CONVEYOR
- OVERSIZE CONVEYOR
- BOGIE
- OPTIONS
- POWERSCREEN® PULSE
- DIMENSIONS

DRUM

- 4.9m (16') Length
- 1.54m (5') Diameter
- 19m² (205ft²) screening area
- Friction four wheel drum drive system
- Variable speed control
- Mesh or Punch plate panels
- Inclined drum (4°-8°)

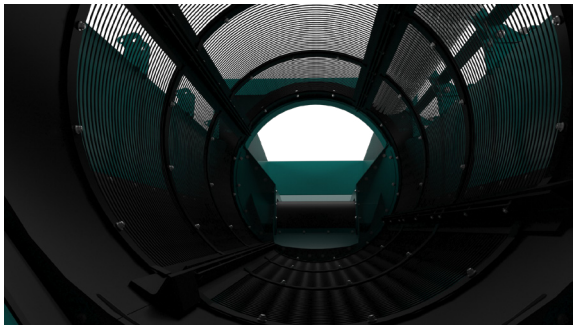





PHOENIX 1600 WHEELED

- OVERVIEW
- HOPPER AND BELT FEEDER
- DRUM
- POWER UNIT & HYDRAULICS
- COLLECTION CONVEYOR
- FINES DISCHARGE CONVEYOR
- OVERSIZE CONVEYOR
- BOGIE
- OPTIONS
- POWERSCREEN® PULSE
- DIMENSIONS

POWER UNIT & HYDRAULICS

- Engine:
  - CAT C4.4 82kW (110HP) Tier 4 Final (USA & EU)
  - CAT C4.4 97kW (130HP) Constant Speed (EU)
- Fuel capacity: 327L (86 US gal)
- Hydraulic capacity: 425L (112 US gal)
- Excellent service access
- Powerful hydraulics

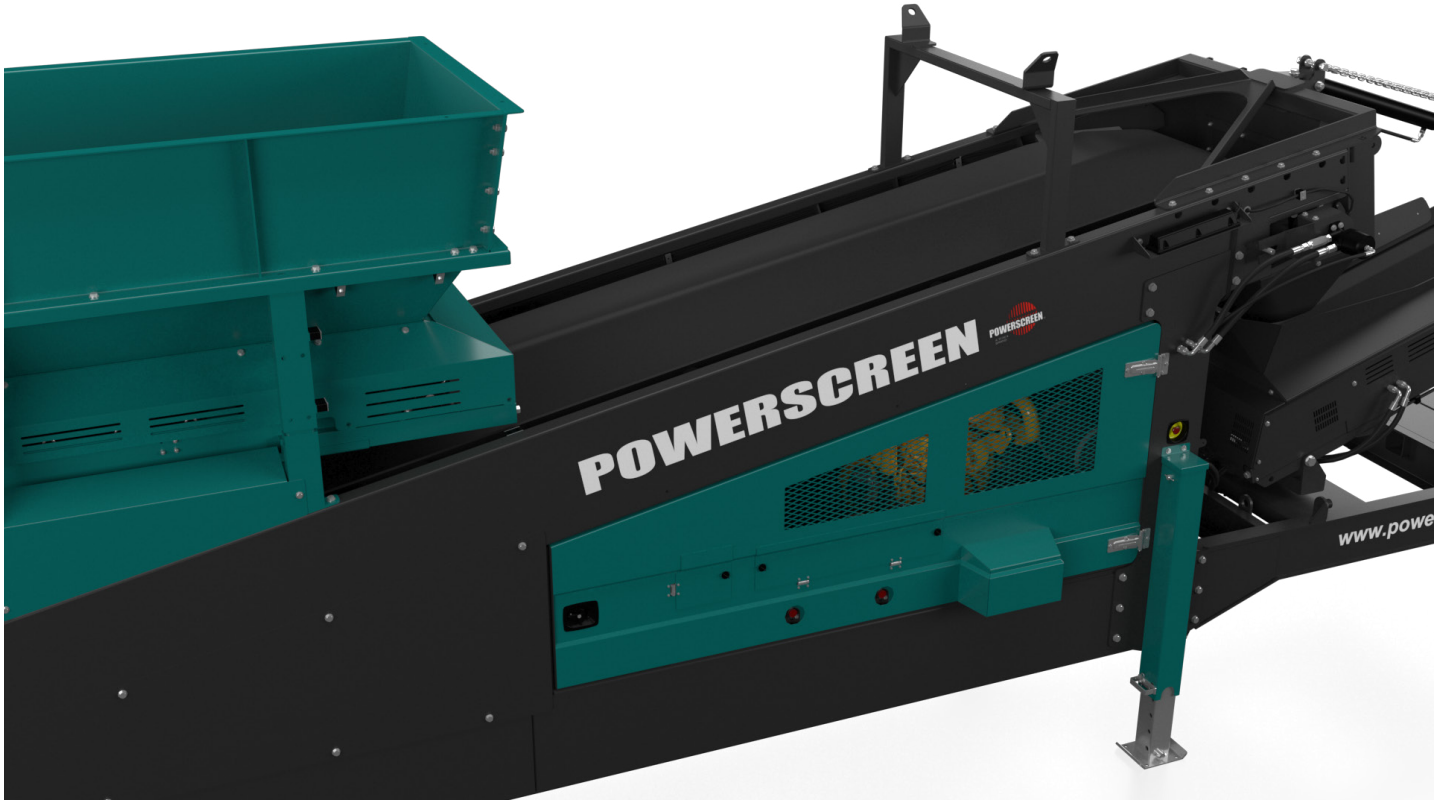



PHOENIX 1600 WHEELED

- OVERVIEW
- HOPPER AND BELT FEEDER
- DRUM
- POWER UNIT & HYDRAULICS
- COLLECTION CONVEYOR
- FINES DISCHARGE CONVEYOR
- OVERSIZE CONVEYOR
- BOGIE
- OPTIONS
- POWERSCREEN® PULSE
- DIMENSIONS

COLLECTION CONVEYOR

- 1200mm (47") 3 ply plain belt, 4 + 2 covers
- Length: 11900mm (39' 1")





PHOENIX 1600 WHEELED

- OVERVIEW
- HOPPER AND BELT FEEDER
- DRUM
- POWER UNIT & HYDRAULICS
- COLLECTION CONVEYOR
- FINES DISCHARGE CONVEYOR
- OVERSIZE CONVEYOR
- BOGIE
- OPTIONS
- POWERSCREEN® PULSE
- DIMENSIONS

FINES DISCHARGE CONVEYOR

- Width: 800mm (32”) 3 ply plain belt, 5 + 1.5 covers
- Length: 8700mm (28’ 7”)
- Remote control 180° swivel
- Variable operating angle 15° - 30°
- Discharge height 5.87m (19’ 3”) @ 30°





PHOENIX 1600 WHEELED

- OVERVIEW
- HOPPER AND BELT FEEDER
- DRUM
- POWER UNIT & HYDRAULICS
- COLLECTION CONVEYOR
- FINES DISCHARGE CONVEYOR
- OVERSIZE CONVEYOR
- BOGIE
- OPTIONS
- POWERSCREEN® PULSE
- DIMENSIONS

OVERSIZE CONVEYOR

- Width: 800mm (32”) 3 ply plain belt, 5 + 1.5 covers
- Length: 5700mm (18’ 8”)
- Variable speed control
- Variable operating angle 15° - 30°
- Discharge height 3.48m (11’ 5”) @ 30°

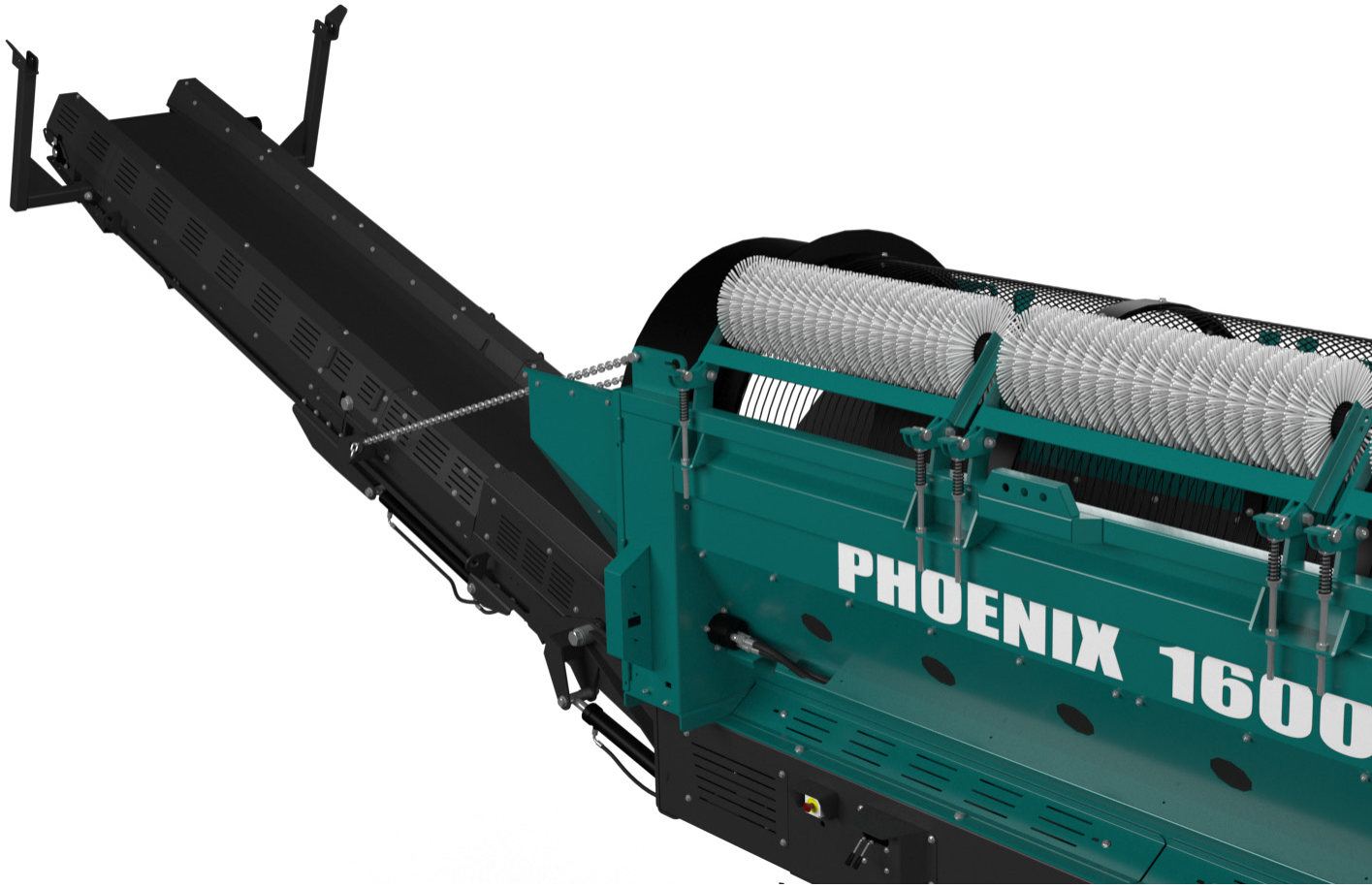



PHOENIX 1600 WHEELED

- OVERVIEW
- HOPPER AND BELT FEEDER
- DRUM
- POWER UNIT & HYDRAULICS
- COLLECTION CONVEYOR
- FINES DISCHARGE CONVEYOR
- OVERSIZE CONVEYOR
- BOGIE
- OPTIONS
- POWERSCREEN® PULSE
- DIMENSIONS

BOGIE

- 2 axles
- Twin 235/75 R17.5 tyres
- Suspension type leaf spring
- Fifth wheel connection
- Airbrakes





PHOENIX 1600 WHEELED

- OVERVIEW
- HOPPER AND BELT FEEDER
- DRUM
- POWER UNIT & HYDRAULICS
- COLLECTION CONVEYOR
- FINES DISCHARGE CONVEYOR
- OVERSIZE CONVEYOR
- BOGIE
- OPTIONS
- POWERSCREEN® PULSE
- DIMENSIONS

OPTIONS

- Tipping grid - 4” and 6”
- Tipping grid discharge chute
- Heavy duty woven mesh
- Punch plate
- Different colour paint
- Flexxaire reversible cooling fan
- Powerscreen Pulse

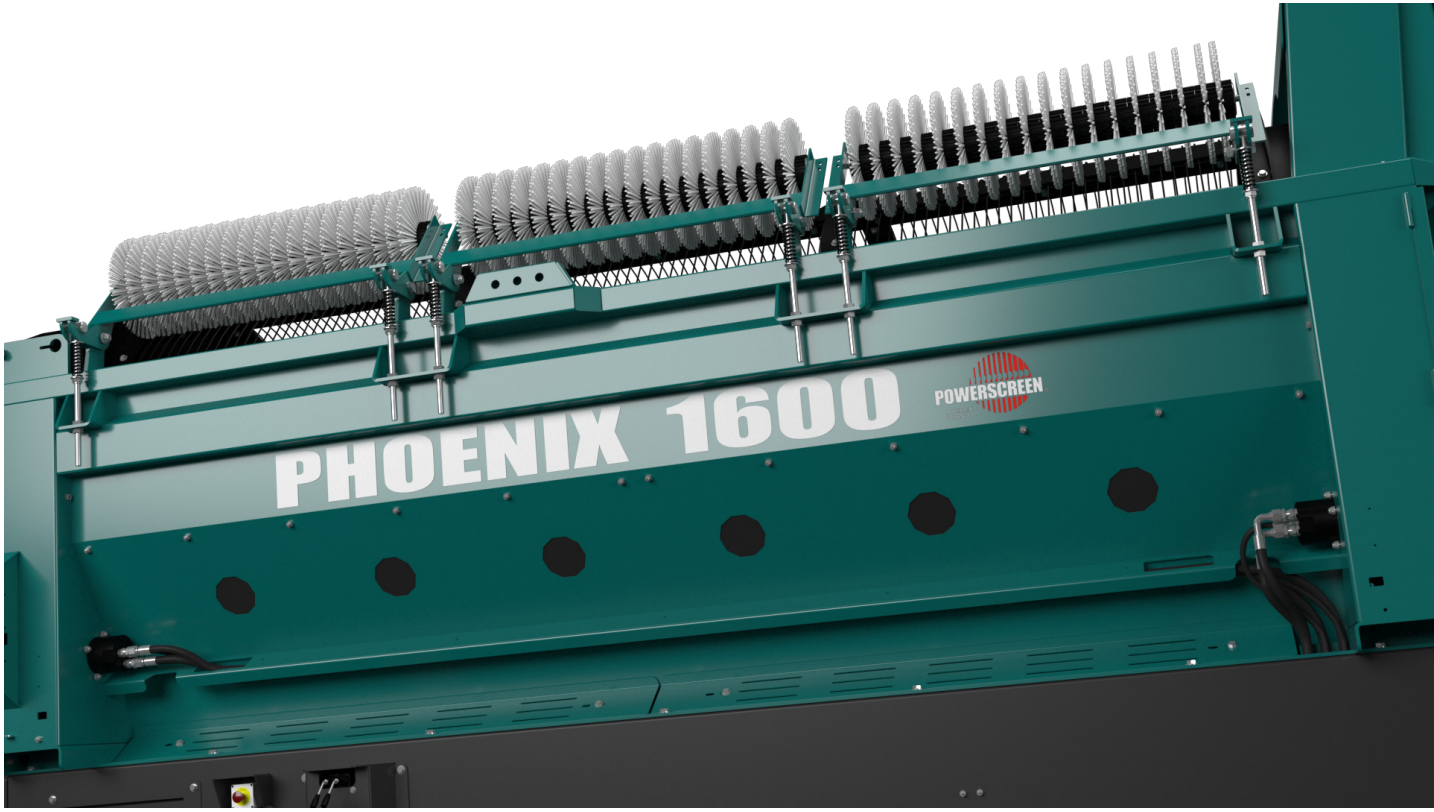



PHOENIX 1600 WHEELED

- OVERVIEW
- HOPPER AND BELT FEEDER
- DRUM
- POWER UNIT & HYDRAULICS
- COLLECTION CONVEYOR
- FINES DISCHARGE CONVEYOR
- OVERSIZE CONVEYOR
- BOGIE
- OPTIONS
- POWERSCREEN® PULSE
- DIMENSIONS

POWERSCREEN PULSE

RECORD, DISPLAY AND ANALYSE DATA:

HIGH EFFICIENCY THROUGH PRECISE INFORMATION

Available online anywhere and at any time: comprehensive information on the GPS location, start and stop times, fuel consumption, tonnages, cone settings, wear ratings, operating hours, maintenance status, and much more.



AVAILABLE ANYWHERE AND AT ANY TIME

DASHBOARD DISPLAY

FLEET OVERVIEW

WEEKLY REPORT DIRECT TO YOUR INBOX

GPS: MACHINE TRACKING

REPORTING
UTILISATION, PERFORMANCE & PART SPECIFIC





PHOENIX 1600 WHEELED

- OVERVIEW
- HOPPER AND BELT FEEDER
- DRUM
- POWER UNIT & HYDRAULICS
- COLLECTION CONVEYOR
- FINES DISCHARGE CONVEYOR
- OVERSIZE CONVEYOR
- BOGIE
- OPTIONS
- POWERSCREEN® PULSE
- DIMENSIONS

DIMENSIONS

Figure 1: Phoenix 1600
Working Position

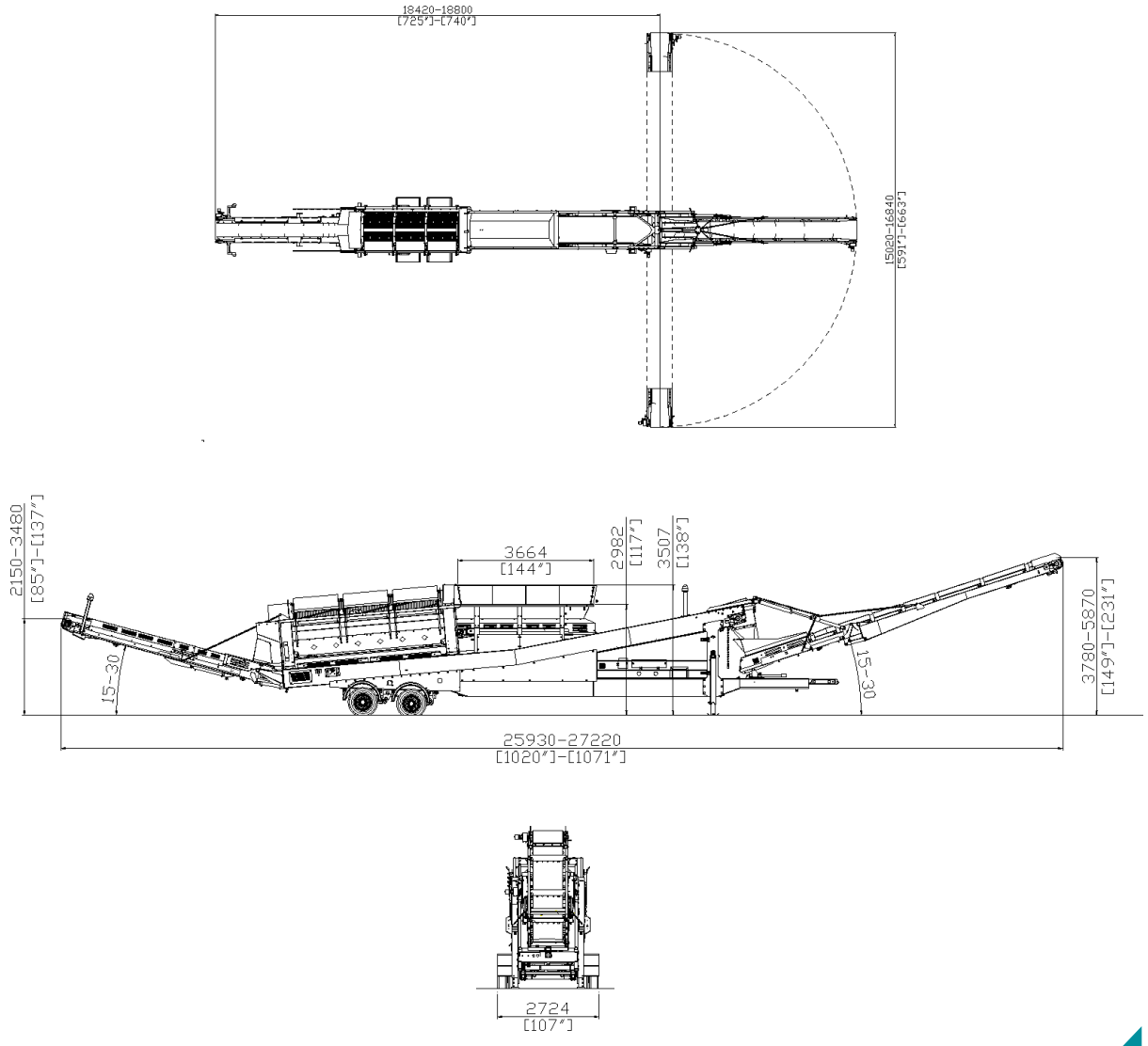

MORE DIMENSIONS OVERLEAF



PHOENIX 1600 WHEELED

- OVERVIEW
- HOPPER AND BELT FEEDER
- DRUM
- POWER UNIT & HYDRAULICS
- COLLECTION CONVEYOR
- FINES DISCHARGE CONVEYOR
- OVERSIZE CONVEYOR
- BOGIE
- OPTIONS
- POWERSCREEN® PULSE
- DIMENSIONS

DIMENSIONS

Figure 2: Phoenix 1600

Transport Position

Please note: It is the dealers responsibility to ensure the plant is road legal in their region.

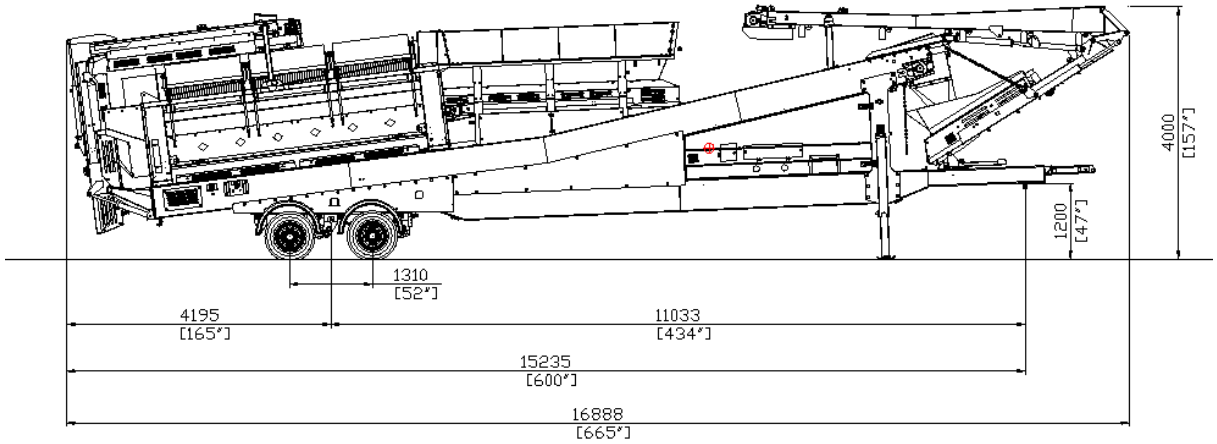

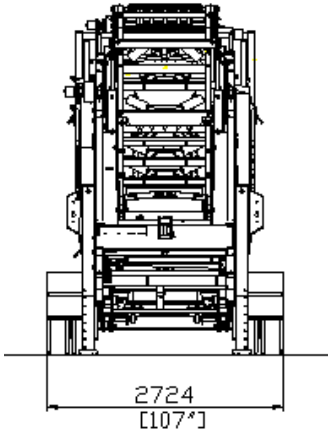

Powerscreen equipment complies with CE requirements.

Please consult Powerscreen if you have any other specific requirements in respect of guarding, noise or vibration levels, dust emissions, or any other factors relevant to health and safety measures or environmental protection needs. On receipt of specific requests, we will endeavour to ascertain the need for additional equipment and, if appropriate, quote extra to contract prices.

All reasonable steps have been taken to ensure the accuracy of this publication, however due to a policy of continual product development we reserve the right to change specifications without notice.

It is the importers' responsibility to check that all equipment supplied complies with local legislation regulatory requirements.

Plant performance figures given in this brochure are for illustration purposes only and will vary depending upon various factors, including feed material gradings and characteristics. Information relating to capacity or performance contained within this publication is not intended to be, nor will be, legally binding.

GET IN TOUCH

Dungannon
200 Coalisland Road, Dungannon,
Co Tyrone, BT71 4DR, Northern Ireland
Tel: +44 (0) 28 87 718 500
Fax: +44 (0) 28 87 747 231

Louisville
11001 Electron Drive,
Louisville, Kentucky, 40299 USA
Tel: +1 502 736 5200
Fax: +1 502 736 5202

www.powerscreen.com