Powerscreen® 1000 Maxtrak

Cone Crusher

SPECIFICATION - Rev 9. 01-01-2017



POWERSCREEN®
A TEREX BRAND

Powerscreen® 1000 Maxtrak

SPECIFICATION - Rev 9. 01-01-2017

Specification		1000 Maxtrak
Total weight		**Tier 3: 30,440kg (67,108lbs) (No Options)**
		Tier 4F: 31,740kg (69,974lbs) (No Options)
Transport	**Length**	**14.6m (47' 11")**
	Height	**3.45m (11'4")**
	Width	**2.8m (9'2)**
Working	**Length**	**14.6m (47' 11")**
	Height	**4.1m (13'5")**
	Width	**3.46m (11'4")**
Crusher type:		**1000 Automax Crusher**
Power unit:		**Caterpillar C-9 ACERT 242kW (325hp) / Scania DC9 257kW (350hp)**
		Scania DC9 273kW (365hp) Constant Speed
Paint colour:		**Blue RAL 5021, Grey RAL 7024, Black RAL 9005**

Features & Benefits

The high performance Powerscreen® 1000 Maxtrak cone crusher has been designed for direct feed applications without pre-screening on clean rock. At the heart of the Maxtrak is the Automax® cone crusher with hydraulic setting, tramp release & unblocking system. Its unique crushing action provides excellent capacity, high reduction & good product cubicity for the production of high quality aggregate & sub-base materials. A level probe over the feed ring regulates the feed belt to ensure the Automax® is choke fed, essential for maximum reduction, manganese life & optimal product shape

- Output potential up to 230 tph (253 US tph)
- Renowned Automax® crusher technology
- Accepts clean all in feed
- Excellent product shape
- High reduction ratio
- Cone feed box level control to maintain choke feeding
- Hydraulic crusher setting
- Cone overload protection
- Heavy duty chassis & track frame
- Metal detector
- Dust suppression system
- Economical to operate with a highly fuel efficient direct drive system
- Heavy duty fabricated chassis & track frame
- Remote control via umbilical

Applications

Aggregate
- Sand & gravel
- Blasted rock
- River rock

Recycling
- C&D waste
- Foundry waste

Mining
- Processed ores
- Processed minerals

All specifications subject to change without prior notice

Powerscreen® 1000 Maxtrak

SPECIFICATION - Rev 9. 01-01-2017





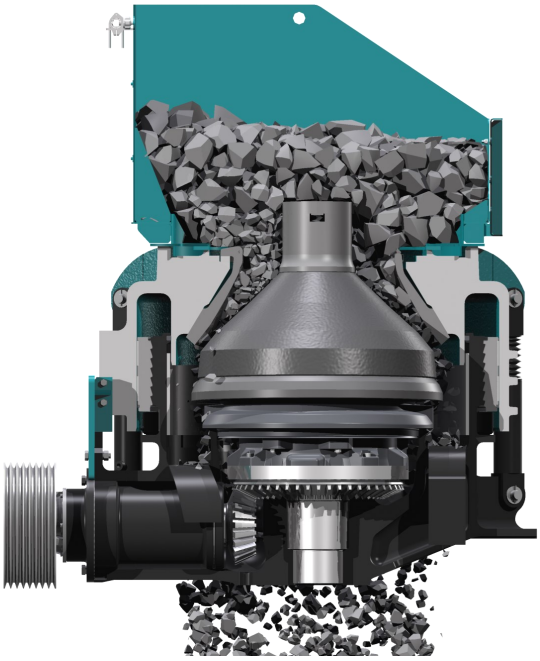

Cone Crusher

Crusher type:	1000 Automax crusher fitted as standard with long throw eccentric
Liners:	Manganese steel alloy mantle & concave
Standard concave:	Medium Coarse (MC)
Lubrication:	Pumped system having a chassis mounted lube tank with air blast cooler
Adjustment:	Hydraulic setting adjustment, automatic overload release & hydraulic unblocking
Control:	2 Operating modes available: - Autoset Mode: fixed parameters - Maxset Mode: load sensing, parameters auto adjust & maximise performance
Concave options:	Extra coarse (XC) Coarse (C) Autosand (AS)
Eccentric option:	Short throw
Drive:	Wedge belt drive from engine via clutch

Crusher Options

CONCAVE	MAXIMUM FEED SIZE	MAXIMUM RECOMMENDED CSS
Medium Coarse	160mm (6.3”)	36mm (1.4”)
Coarse	175mm (6.9”)	36mm (1.4”)
Extra Coarse	195mm (7.7”)	36mm (1.4”)
Autosand	63mm (2.5”)	32mm (1.25”)
Each of the above available with choice of long & short throw eccentrics		

All specifications subject to change without prior notice

Powerscreen® 1000 Maxtrak

SPECIFICATION - Rev 9. 01-01-2017

Feed Hopper

Hopper type:	Fixed feed hopper
Hopper length:	3.38m (11')
Hopper width:	2.5m (8' 2")
Hopper capacity:	Up to 4.4m^3 (5.8 cu. yd.) gross depending on method of feed
Hopper body:	Fabricated in 10mm thick wear resistant steel plate, with internal crash bars to minimise impact load on the feed conveyor

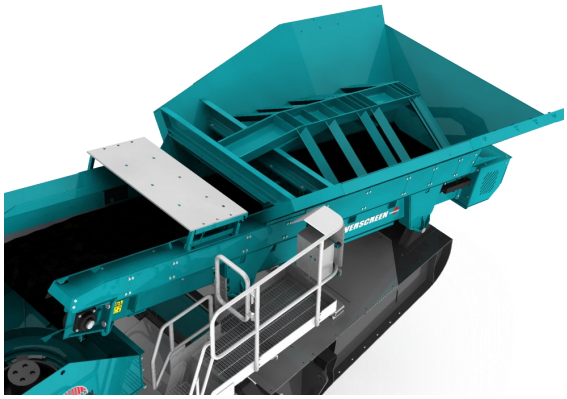

Feed Conveyor

Conveyor type:	Shallow troughed belt variable speed
Design:	Raises & lowers hydraulically for transport, operation & crusher maintenance
Belt type:	EP500/3 with 5mm top & 1.5mm bottom heavy-duty rubber covers, vulcanised joint
Belt adjustment:	Screw adjustment at the tail shaft
Belt width:	1000mm (39")
Feed height:	2.8m (9' 2")
Drive:	Hydraulic drive via flange mounted gear-box
Impact rollers:	Below feed hopper
Metal detector:	Suitable for detecting steel & manganese, complete with audible warning device & connected to stop the feed conveyor
Barge boards:	Extend from the feed conveyor to the conveyor head
Lubrication:	Oil lubricated head drum gearbox Grease nipples for lubrication of shaft bearings
Level probe:	Crusher feed ring fitted with level probe designed to regulate & constantly choke feed the crusher







All specifications subject to change without prior notice

Powerscreen® 1000 Maxtrak

SPECIFICATION - Rev 9. 01-01-2017

Product Conveyor

Conveyor type:	Troughed belt fixed speed conveyor with hydraulic drive
Belt type:	EP400/3 with 4mm top & 2mm bottom heavy-duty rubber co-vers, & vulcanised joint
Belt width:	800mm (32”)
Discharge height:	3.25m (10’ 8”)
Stockpile volume:	50m^3 (65 cu. yd.)
Impact rollers:	Fitted below the crusher outlet
Skirting:	Fully skirted rubber sealing along the conveyor length
Drive:	Direct drive hydraulic motor
Belt covers:	Canvas type removable dust covers are fitted over the ex-posed section of the conveyor
Belt adjustment:	Screw adjustment at the head drum
Lubrication:	Grease nipples for lubrication of shaft bearings
Speed sensor:	Designed to stop plant feed when discharge conveyor stops





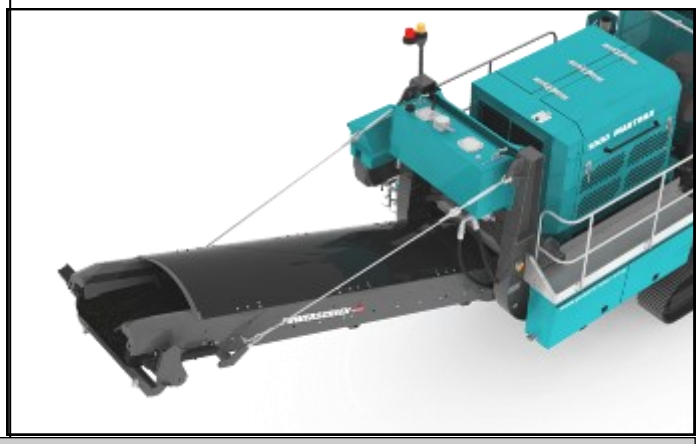

Chutes

Feed box:	Fabricated in 6mm mild steel plate. Hinge down back plate to lower feed conveyor head section for transportation
Product conveyor	Fabricated in 10mm mild steel plate with replaceable 10mm wear resistant liners at impact points



All specifications subject to change without prior notice

Powerscreen® 1000 Maxtrak

SPECIFICATION - Rev 9. 01-01-2017

Power unit

Tier 3/Stage IIIA:	Caterpillar C-9 ACERT, 242kW (325hp)1800rpm
Operating Conditions:	Ambient temp. +30°C to –5°C (86ºF to 23ºF) at altitudes up to 1000m (3281ft) above sea level.
Operating rpm range:	1750 - 1850rpm
Plant drive:	High quality pumps driven via belt drive from engine
Fuel tank capacity:	522 L (137 US Gal)



Tier 4F/ Stage IV:	Scania DC09 257 kW (350hp) @ 1800rpm
Operating Conditions:	Ambient temp.+30°C to –5°C (86ºF to 23ºF) at altitudes up to 1000m (3281ft) above sea level.
Operating rpm range:	1750 - 1850rpm
Emission control technique:	Selective Catalytic Reduction (SCR)
Reductant Tank Size:	60 L (16 US Gal)
Plant drive:	High quality pumps driven via engine PTOs
Fuel tank capacity:	650 L (171 US Gal)



Hydraulic tank capacity:	300 L (79 US Gal)
Cone lube oil tank capacity:	220 L (58 US Gal)
Crusher drive:	Direct drive via wedge belts
Crusher drive tensioning:	Manually adjustable screw tensioners located under powerunit
Clutch type:	Highly efficient, Self-adjusting HPTO 12 dry plate clutch with electro hydraulic operation
Stage IIIA Constant Speed: (Optional)	Scania DC09 273kW (365hp)
Operating rpm Range:	1800rpm

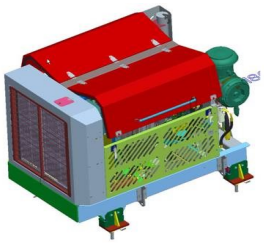



All specifications subject to change without prior notice

Powerscreen® 1000 Maxtrak

SPECIFICATION - Rev 9. 01-01-2017

Scania Stage IV / Tier 4 Final Technology
Scania industrial engines meet the requirements of Stage IV and Tier 4 Final without the need for a particulate filter. With only EGR and SCR technology, the installation will be unaffected. Scania-developed systems for engine management and emission control ensure an attractive blend of performance and opening economy.
The function of the SCR system is based on the injection of a urea solution (AdBlue of DEF , Diesel Exhaust Fluid) into the after treatment system. With EGR, a small amount of exhaust gases is returned to the intake of the engine, diluting the intake air and reducing the oxygen concentration. This will reduce the combustion temperature and further reduce emissions.

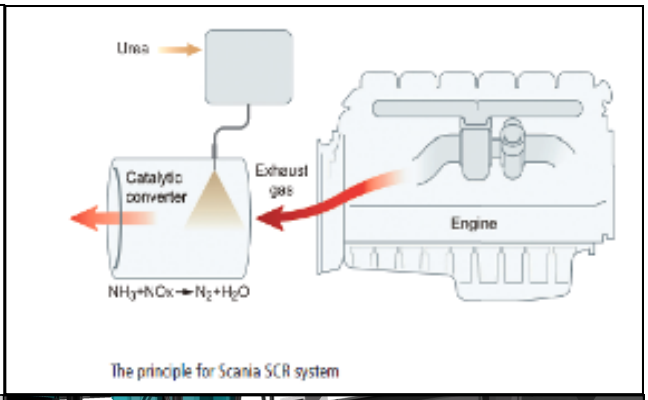

The principle for Scania SCR system

Chassis

Heavy duty I-section welded construction,
provides maximum strength & accessibility



Crawler Tracks

Type:	Heavy-duty bolt on tracks fitted
Longitudinal centres:	3240mm (128”)
Track pad width:	400mm (15.7”)
Climbing grade:	30˚ maximum
High speed:	1.3kph (0.8mph)
Drive:	Hydraulic
Track tensioning:	Hydraulic adjuster, grease tensioned



Guards

Wire mesh or sheet metal guards are provided for all drives, flywheels, pulleys & couplings

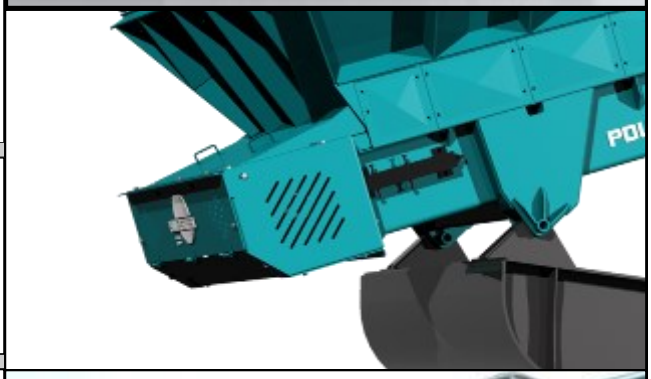

Platforms

Platforms are provided for inspection & maintenance, allowing access to each side of the engine and
crusher & one side of the feed conveyor head section

All platforms are galvanised as standard & are made from steel flooring with steel toe boards, double row handrails & access ladders



Controls

Full PLC control panel

Full system diagnostics & monitoring

Key functions controlled from the panel include:

- **Automatic sequential start/stop**
- **Feed conveyor start/stop**
- **Feed conveyor speed control**
- **Engine speed control**
- **Crusher level settings**
- **Crusher CSS control**
- **Calibration & monitoring of liner wear**
- **Tracking mode on/off**





Dust Suppression Sprays

Sprays bars with atomiser nozzles mounted over the crusher mouth, product conveyor feed & discharge points. Piped to an inlet manifold

Type:	Clean water atomising nozzles
Inlet:	Single point on chassis
Pressure required:	2.8 bar (42 psi)
Frost protection:	Via system drain valves
Pump:	Optional extra



Umbilical Control

An umbilical control unit is also supplied with the plant. This is used to control the tracking function & is also fitted with a stop button for the plant



Hydraulic Water Pump

A hydraulically powered water pump is available to power the dust suppression system



Electric Refuelling Pump

A 24 volt refuelling pump, allows fuel to be drawn from a remote source. Fuel transfer rate is 50 L/min



Radio Remote Control

Complete with integrated tracking functions & plant stop button. NB - Only available in certain countries where type approval has been obtained

Remote can also be used to:

- Start/Stop feeder



Hot/Cold Climate Oils

Cold climate oils - (Recommended for ambient temperatures between -20 to +30ºC)

Hot climate oils - (Recommended for ambient temperatures between +15 to +50ºC)



Control Panel Positive Pressurisation

An additional unit designed to reduce dust particles within the Control Panel.

A continuous flow of clean air is passed through the cabinet whilst the unit simultaneously filters out any particulate laden air.

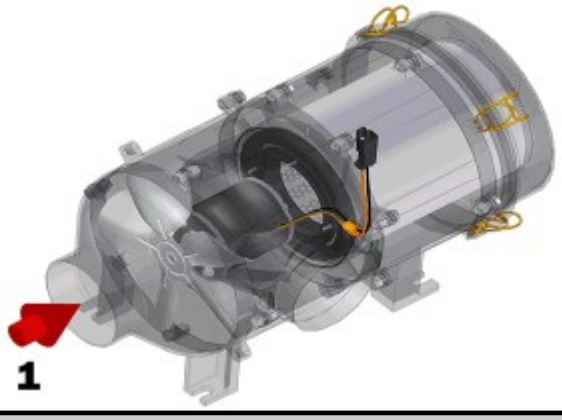

Powerscreen Pulse

Powerscreen Pulse is a system which allows the machine to relay performance and production data via phone networks, or by satellite when there's no cellular signal, to any device with a web browser, such as a PC, tablet or Smartphone.

POWERSCREEN® PULSE

Optional Extras

- Automax Extra Coarse (XC) concave
- Automax Coarse (C) concave
- Autosand (AS) concave
- Short throw eccentric
- Feed hopper extensions plates, (remove for transport)
- Hot/Cold Climate Oils
- Control Panel Positive Pressurisation
- Electric refuelling pump kit
- Radio remote control
- Product conveyor belt weigher
- Hydraulic water pump
- Powerscreen Pulse

Powerscreen® 1000 Maxtrak

SPECIFICATION - Rev 9. 01-01-2017

Approximate Plant Weights & Dimensions

Transport length:	14.6m	(47’ 11”)
Transport width:	2.8m	(9’ 2”)
Transport height:	3.45m	(11’ 4”)

Total plant weight: **Tier 3: 30,440kg (67,108lbs) (No Options)**
Tier 4F: 31,740kg (69,974lbs) (No Options)

1000 Maxtrak
Transport Dimensions

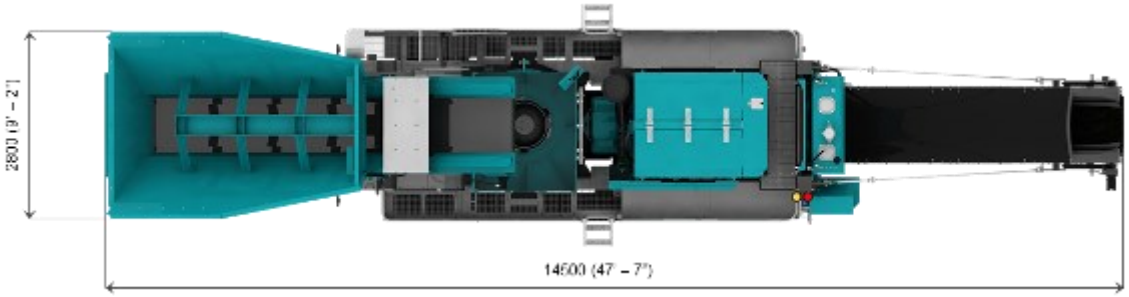

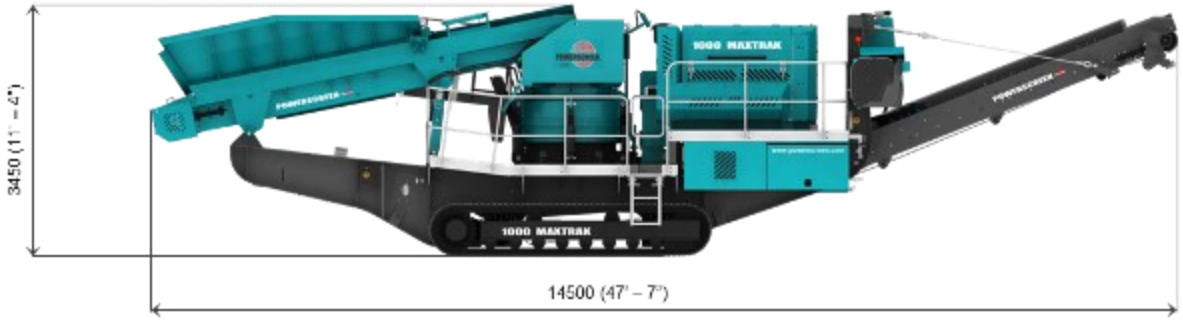

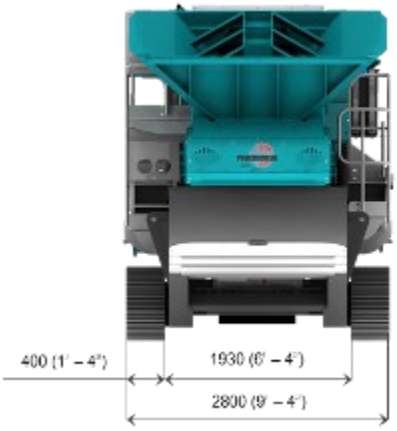

All specifications subject to change without prior notice

Approximate Plant Weights & Dimensions

Working length:	14.6m	(47’ 11”)
Working height:	4.1m	(13’ 5”)
Working width:	3.46m	(11’ 4”)

1000 Maxtrak
Working Dimensions

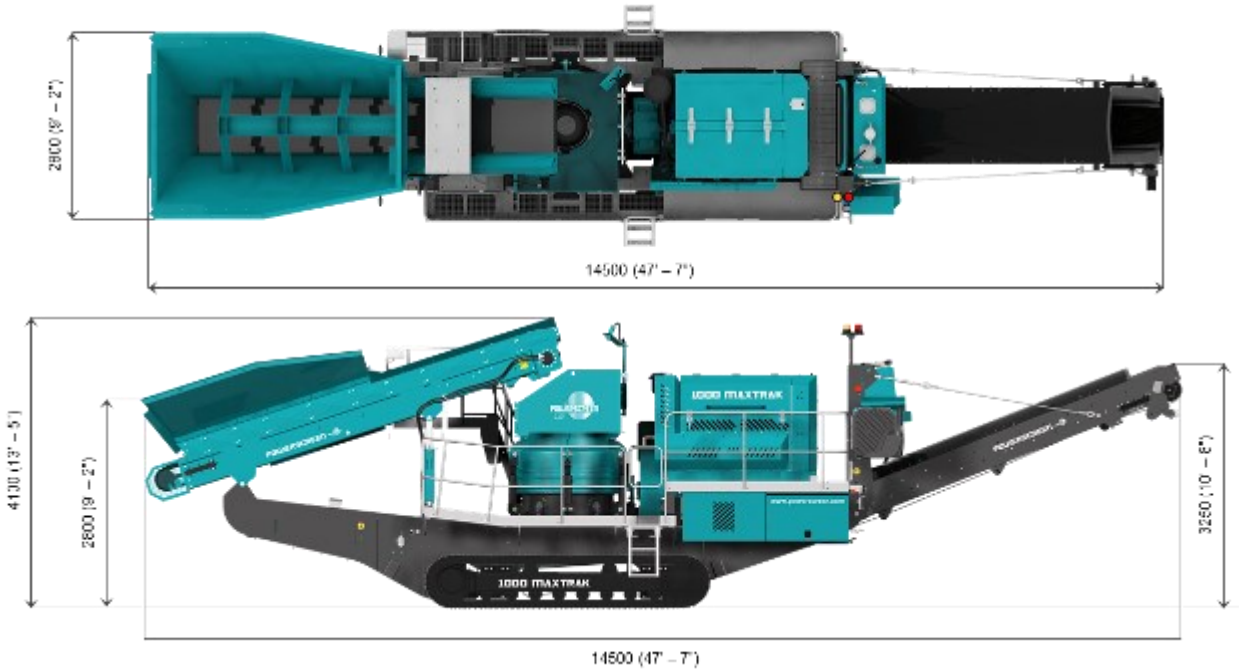



Powerscreen equipment complies with CE requirements.

Please consult Powerscreen if you have any other specific requirements in respect of guarding, noise or vibration levels, dust emissions, or any other factors relevant to health and safety measures or environmental protection needs. On receipt of specific requests, we will endeavour to ascertain the need for additional equipment and, if appropriate, quote extra to contract prices.

All reasonable steps have been taken to ensure the accuracy of this publication, however due to a policy of continual product development we reserve the right to change specifications without notice.

It is the importers' responsibility to check that all equipment supplied complies with local legislation regulatory requirements.

Plant performance figures given in this brochure are for illustration purposes only and will vary depending upon various factors, including feed material gradings and characteristics. Information relating to capacity or performance contained within this publication is not intended to be, nor will be, legally binding.

Terex GB Ltd.
200 Coalisland Road
Dungannon
Co. Tyrone
Northern Ireland
BT71 4DR

Tel: +44(0) 28 8774 0701
Fax: +44(0) 28 8774 6569

E-Mail: sales@powerscreen.com
Web: www.powerscreen.com

Terex is a registered trademark of Terex Corporation in the United States of America and many other countries.
Powerscreen is a registered trademark of Terex GB Ltd in the United States of America and many other countries.

Copyright Terex Corporation 2017