Powerscreen® 1150 Maxtrak

Cone Crusher

SPECIFICATION - Rev 4. 01-01-2017



POWERSCREEN®
A TEREX BRAND

Powerscreen® 1150 Maxtrak

SPECIFICATION - Rev 4. 01-01-2017

Specification		1150 Maxtrak
Total weight		42,900kg (94,578lbs) (No Options)
Transport	**Length**	16.9m (55’ 5”)
	Width	3m (9’ 10”)
	Height	3.6m (11’ 10”)
Working	**Length**	16.4m (53’ 10”)
	Width	4.5m (14’ 9”)
	Height	5.6m (18’ 4”)

Crusher type:	1150 Automax® Crusher
Power unit:	Caterpillar C-13 ACERT 328kW (440hp) or Scania DC13 331kW (450hp)
Paint colour:	Blue RAL 5021, Grey RAL 7024, Black RAL 9005

Features & Benefits

The Powerscreen® 1150 Maxtrak is a high performance, medium sized track mobile cone crusher. At the heart of the Maxtrak is the Automax® cone crusher with hydraulic setting, tramp release & unblocking system. Its unique crushing action provides excellent capacity, high reduction & good product cubicity for the production of high quality aggregate & sub-base materials. A level probe over the feed ring regulates the feed belt to ensure the cone chamber is choke fed, essential for maximum reduction, manganese life & optimal product shape.

- Output potential up to 300 tph (330 US tph)
- Renowned Automax® crusher technology
- Accepts clean all in feed
- Excellent product shape
- High reduction ratio
- Cone feed box level control to maintain choke feeding
- Hydraulic crusher setting. Can be adjusted on the fly
- Cone overload protection
- Heavy duty chassis & track frame
- Metal detector
- Dust suppression system
- Economical to operate with a highly fuel efficient direct drive system
- Heavy duty fabricated chassis & track frame
- Remote control via umbilical

Applications

Aggregate
- Sand & gravel
- Blasted rock
- River rock

Recycling
- C&D waste
- Foundry waste

Mining
- Processed ores
- Processed minerals

Powerscreen® 1150 Maxtrak

SPECIFICATION - Rev 4. 01-01-2017





Cone Crusher

Crusher type:	**1150 Automax® crusher fitted as standard with long throw eccentric**
Liners:	**Manganese steel alloy mantle & concave**
Standard concave:	**Medium Coarse (MC)**
Lubrication:	**Pumped system having a chassis mounted lube tank with air blast cooler**
Adjustment:	**Hydraulic setting adjustment, automatic overload release & hydraulic unblocking**
Control:	**2 Operating modes available: - Autoset Mode: fixed parameters - Maxset Mode: load sensing, parameters auto adjust & maximise performance. Variable speed.**
Concave options:	**Extra coarse (XC) Fine (F) Common upper frame for all liners**
Eccentric option:	**Short throw**
Drive:	**Banded wedge belt drive from engine via clutch**

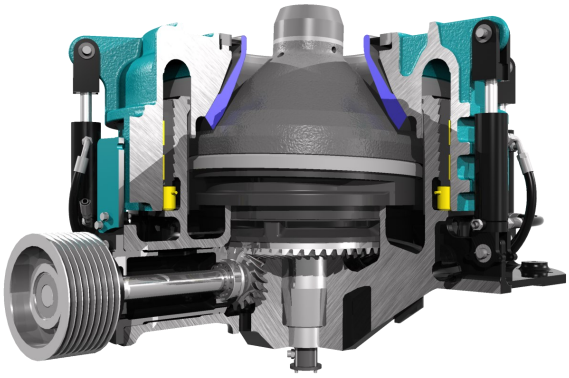

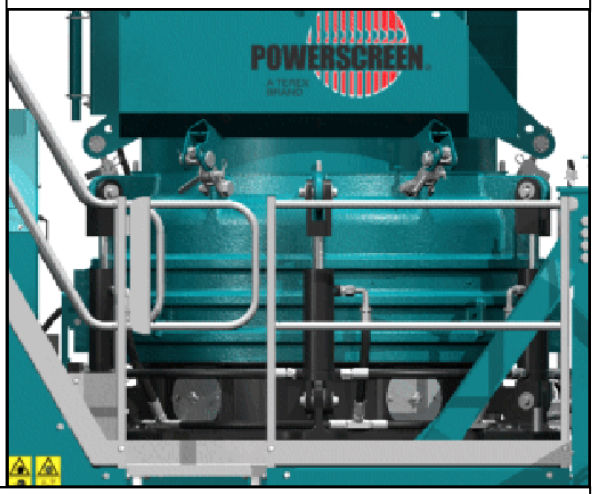

Crusher Options

CONCAVE	MAXIMUM FEED SIZE	MAXIMUM RECOMMENDED CSS
Fine	110mm (4.3”)	45mm (1.8”)
Medium Course	180mm (7.1”)	45mm (1.8”)
Extra Coarse	205mm (8.1”)	45mm (1.8”)
Each of the above available with choice of long & short throw eccentrics		

All specifications subject to change without prior notice

POWERSCREEN® A TEREX BRAND

Powerscreen® 1150 Maxtrak

SPECIFICATION - Rev 4. 01-01-2017

Feed Hopper

Hopper type:	**Fixed, tapered hopper to aid material flow**
Hopper length:	**3.5m (11' 6")**
Hopper width:	**2.25m (7' 5")**
Hopper capacity:	**Up to 6.0m^3 (7.8 cu. yd.) gross depending on method of feed**
Hopper body:	**Fabricated in 10mm thick plate, with internal crash bars to minimise impact load on the feed conveyor. 10mm & 6mm wear resistant liners as standard.**

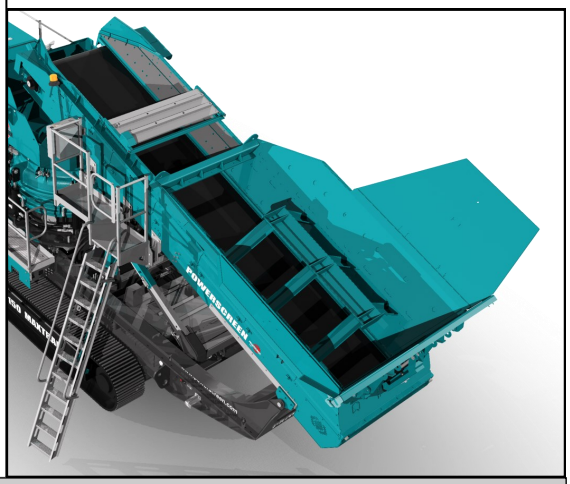

Feed Conveyor

Conveyor type:	**Shallow troughed belt variable speed**
Design:	**Raises & lowers hydraulically for transport, operation & crusher maintenance**
Belt type:	**EP630/4 with 6mm top & 2mm bottom heavy-duty rubber covers, vulcanised joint**
Belt adjustment:	**Screw adjustment at the tail shaft**
Belt width:	**1200mm (47")**
Feed height:	**3.05m (10')**
Drive:	**Hydraulic drive via gearbox**
Impact rollers:	**Below feed hopper**
Metal detector:	**Fitted with over & under belt detector. Complete with audible warning device & connected to stop the feed conveyor**
Lubrication:	**Oil lubricated head drum gearbox Low level greasing points for lubrication of shaft bearings**
Level probe:	**Crusher feed ring fitted with ultrasonic level sensor designed to regulate & constantly choke feed the crusher**



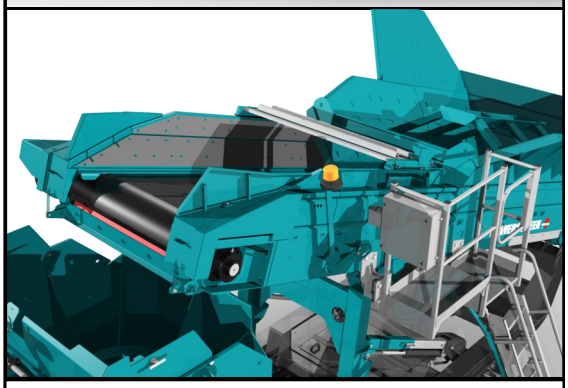

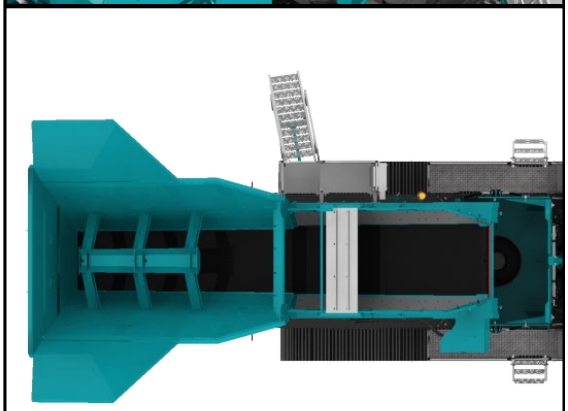

All specifications subject to change without prior notice

POWERSCREEN® A TEREX BRAND

Powerscreen® 1150 Maxtrak

SPECIFICATION - Rev 4. 01-01-2017

Product Conveyor

Conveyor type:	**Troughed belt fixed speed conveyor with hydraulic drive. Fully lowers for service access & removable for maintenance**
Belt type:	**EP500/3 with 5mm top & 1.5mm bottom heavy-duty rubber covers**
Belt width:	**1000mm (39")**
Discharge height:	**3.30m (10' 10")**
Stockpile volume:	**50m^3 (65 cu. yd.)**
Impact bars:	**Fitted immediately below the crusher outlet**
Skirting:	**Fully skirted rubber skirting along the conveyor length**
Drive:	**Direct drive hydraulic motor**
Belt covers:	**Aluminium (Optional)**
Belt adjustment:	**Head drum screw adjusters**
Dust Suppression:	**Spraybar fitted at head drum**
Lubrication:	**Low level greasing points for lubrication of shaft bearings**
Speed sensor:	**Designed to stop plant feed when discharge conveyor stops**





Chutes

Feed box:	**Quick release system to aid removal of feed-in box for wear part changes**
Product conveyor	**Fabricated in 10mm mild steel plate with 10mm wear resistant replaceable liners. Diverging taper along belt direction to reduce friction**



Powerscreen® 1150 Maxtrak

SPECIFICATION - Rev 4. 01-01-2017

Power unit

Tier 3 / Stage IIIA:	**Caterpillar C-13 ACERT**, 328 kW (440hp)
Operating Conditions:	Ambient temp. +30°C to –5°C (86ºF to 23ºF) at altitudes up to 1000m (3281ft) above sea level.#
Operating rpm range:	1750rpm—1900rpm
Plant drive:	High quality pumps driven via engine PTOs
Fuel tank capacity:	1000 L (264 US Gal)

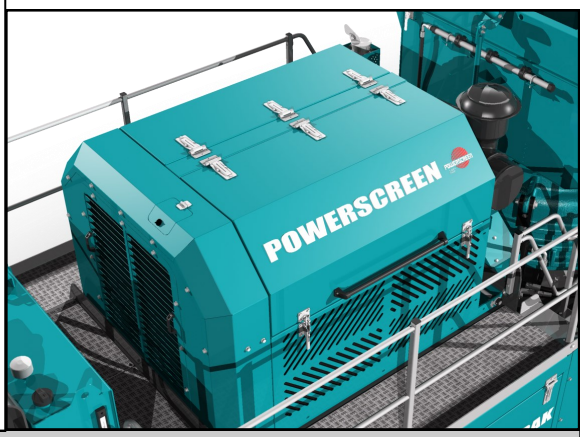

Tier 4F / Stage IV :	**Scania DC13,** 331 kW (450hp)
Operating Conditions:	Ambient temp.+30°C to –23°C (86ºF to 23ºF) altitudes up to 1000m (3281ft) above sea level.#
Operating rpm range:	1550rpm—1700rpm
Emission control technique:	Selective Catalytic Reduction (SCR)
Reductant Tank Size:	60 L (16 US Gal)
Plant drive:	High quality pumps driven via engine PTOs
Fuel tank capacity:	1000 L (264 US Gal)

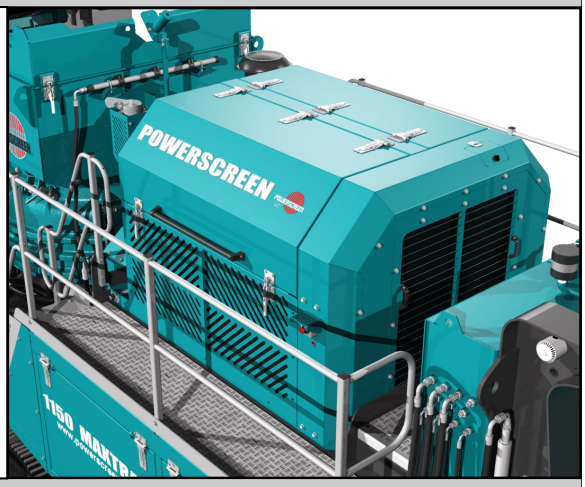

Hydraulic tank capacity:	660 L (174 US Gal)
Cone lube oil tank capacity:	275 L (72 US Gal)
Crusher drive:	Direct drive via wedge belts
Crusher drive tensioning:	Pulley tensioning system with banded belts
Clutch type:	Highly efficient, Self-adjusting HPTO 12 dry plate clutch with electro hydraulic operation

For applications outside this range please consult with Powerscreen as the plant performance / reliability may be affected.

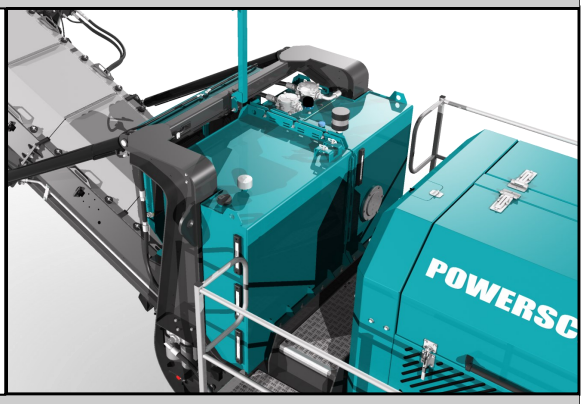

Scania Stage IV / Tier 4 Final Technology

Scania industrial engines meet the requirements of Stage IV and Tier 4 Final without the need for a particulate filter. With only EGR and SCR technology, the installation will be unaffected. Scania-developed systems for engine management and emission control ensure an attractive blend of performance and operating economy.
The function of the SCR system is based on the injection of a urea solution (AdBlue or DEF, Diesel Exhaust Fluid) into the after-treatment system. With EGR, a small amount of exhaust gases is returned to the intake of the engine, diluting the intake air and reducing the oxygen concentration. This will reduce the combustion temperature and further reduce emissions.

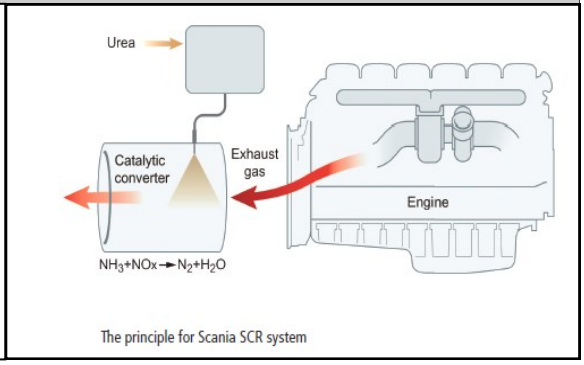

The principle for Scania SCR system

Powerscreen® 1150 Maxtrak

SPECIFICATION - Rev 4. 01-01-2017

Chassis

Heavy duty I-section welded construction, provides maximum strength & accessibility

Transport tie down and cross tie points

Internal steel pipes

Heavy duty chamber anti-vibration mounts

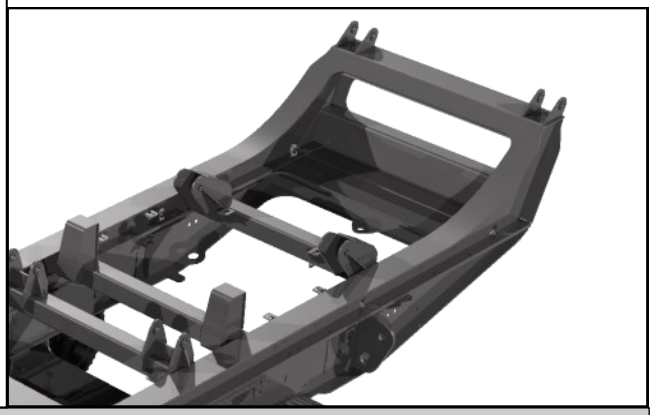

Crawler Tracks

Type:	**Heavy-duty bolt on tracks**
Longitudinal centres:	**3800mm (12’ 6”)**
Track pad width:	**500mm (20”)**
Climbing grade:	**30˚ maximum**
High speed:	**1.1kph (0.7mph)**
Drive:	**Hydraulic, proportional control**
Track tensioning:	**Hydraulic adjuster, grease tensioned**

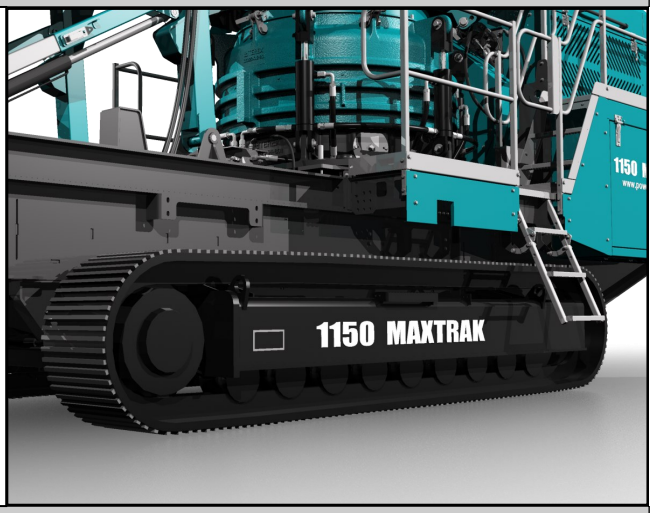

Guards

Sheet metal guards are provided for all drives, pulleys & couplings

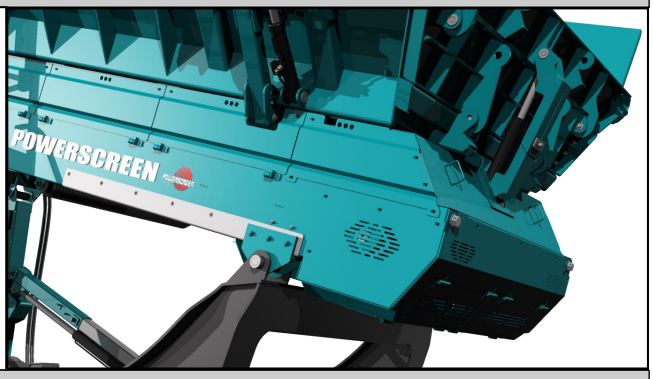

Platforms

Platforms are provided for inspection & maintenance, allowing access all round the engine and both sides of the crusher , along with one side of the feed conveyor head section

All platforms are galvanised as standard & are made from steel flooring with steel toe boards, double row handrails, high grip steps & access ladders



All specifications subject to change without prior notice

POWERSCREEN®
A TEREX BRAND

Controls

Full PLC control panel

Full system diagnostics & monitoring

Key functions controlled from the panel include:

- Automatic sequential start/stop
- Feed conveyor start/stop
- Feed conveyor speed control
- Engine speed control
- Crusher level settings
- Crusher CSS control
- Calibration & monitoring of liner wear
- Tracking mode on/off





Dust Suppression Sprays

Sprays bars with atomiser nozzles mounted over the crusher mouth, product conveyor feed & discharge points. Piped to an inlet manifold

Type:	**Clean water atomising nozzles**
Inlet:	**Single point on chassis**
Pressure required:	**2.8 bar (42 psi)**
Frost protection:	**Via system drain valves**
Pump:	**Optional extra**

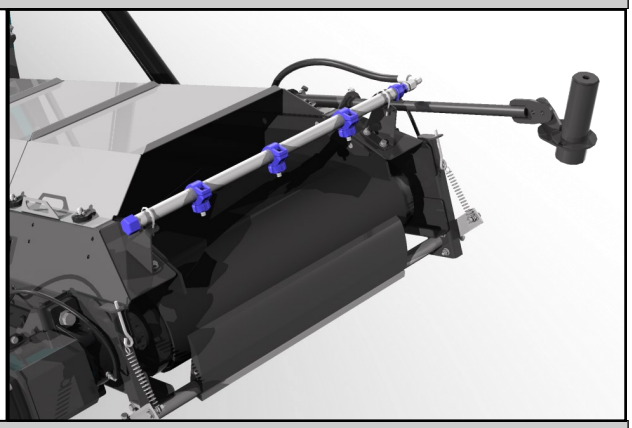

Umbilical Control

A Scanreco umbilical control unit is also supplied with the plant. This is used to control the tracking function & is also fitted with a stop button for the plant



Powerscreen® 1150 Maxtrak Options

Feed Hopper Extensions

Hydraulically folding and locking rear extensions. Provides a loading width of 4.1m (13’ 6”) at the rear of the feeder.

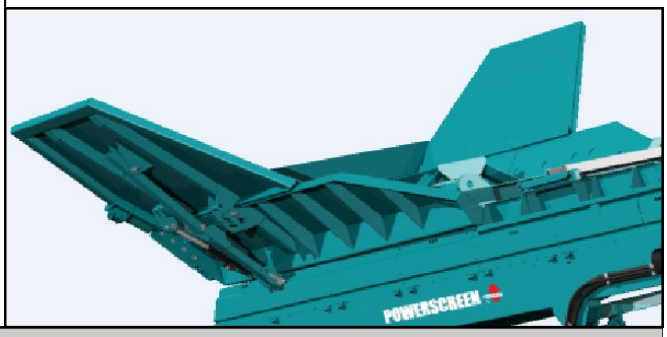

Product Conveyor Dust Covers

Aluminium dust covers along discharge end of conveyor.



Product Conveyor Stockpile Sensor

Ultrasonic level sensor designed to control the upstream functions of the machine when the stockpile reaches a predefined level.

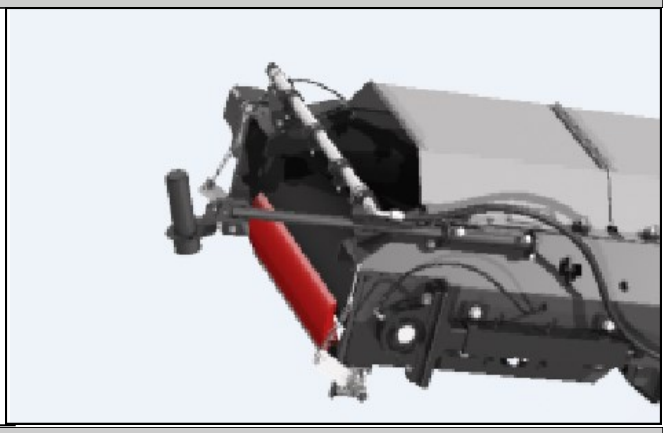

Camera over Crusher

A camera mounted on the feed-in box provides the operator with an excellent view of the material entering the cone. The 5.6” heavy duty screen is mounted beside the main control panel.

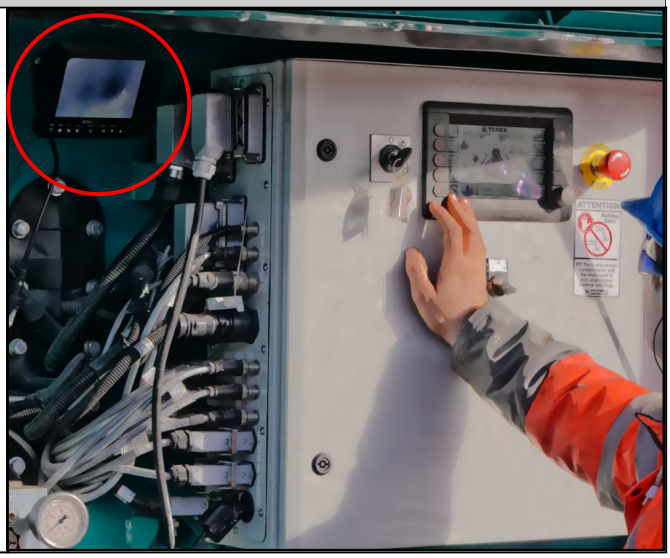

Powerscreen® 1150 Maxtrak Options

Hydraulic Water Pump

A hydraulically powered water pump is available to power the dust suppression system

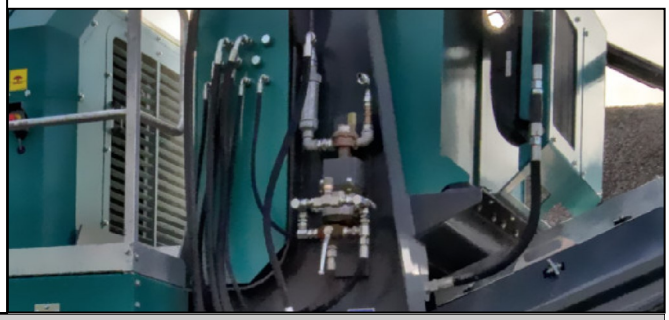

Electric Refuelling Pump

A 24 volt refuelling pump, allows fuel to be drawn from a remote source. Fuel transfer rate is 100 L/min. Available for urea re-filling also.



Radio Remote Control

Scanreco unit complete with integrated tracking functions & plant stop button. NB - Only available in certain countries where type approval has been obtained
Remote can also be used to start and stop the feeder



Lighting Mast

Lighting tower complete with 5 15W LED 900lm lights

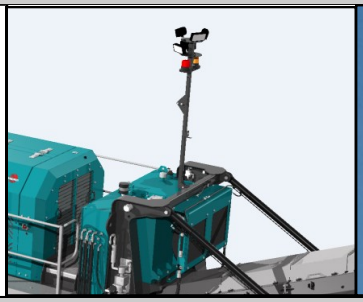



Hot/Cold Climate Oils

Cold climate oils - (Recommended for ambient temperatures between -20 to +30ºC)

Hot climate oils - (Recommended for ambient temperatures between +15 to +50ºC)



Powerscreen® 1150 Maxtrak Options

SPECIFICATION - Rev 4. 01-01-2017

Control Panel Positive Pressurisation

An additional unit designed to reduce dust particles within the Control Panel.

A continuous flow of clean air is passed through the cabinet whilst the unit simultaneously filters out any particulate laden air.

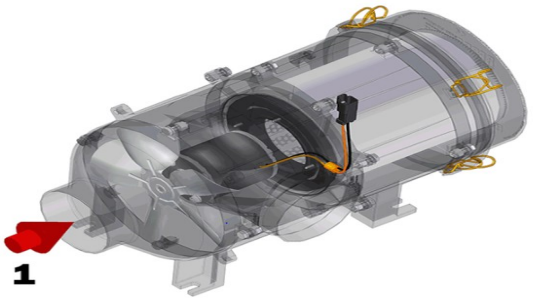

Powerscreen Pulse

Powerscreen Pulse is a system which allows the machine to relay performance and production data via phone networks, or by satellite when there's no cellular signal, to any device with a web browser, such as a PC, tablet or Smartphone.

POWERSCREEN® PULSE

Other Options

- Extra Coarse (XC) concave
- Fine (F) concave
- Short throw eccentric
- Cold climate oils
- Hot climate oils
- Powerscreen Pulse
- Hot climate coolers
- Product conveyor belt weigher
- Hydraulic water pump
- Control panel positive pressurisation

Powerscreen® 1150 Maxtrak

SPECIFICATION - Rev 4. 01-01-2017

Approximate Plant Weights & Dimensions

Transport length:	**16.9m**	**(55’ 5”)**
Transport width:	**3m**	**(9’ 10”)**
Transport height:	**3.6m**	**(11’ 10”)**

Total plant weight: **42,900 kgs (94,578 lbs) (No Options)**

1150 Maxtrak
Transport Dimensions

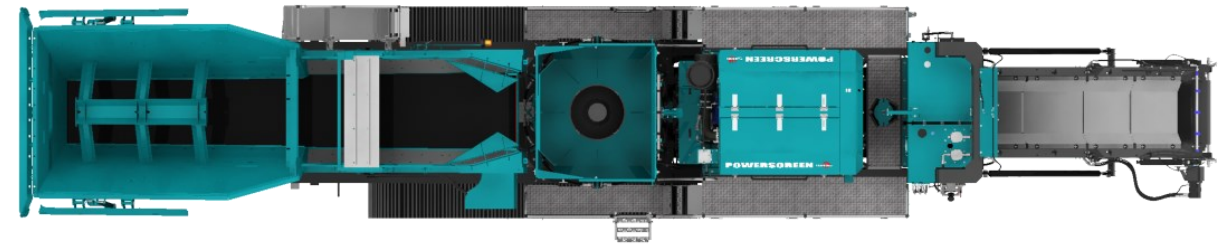

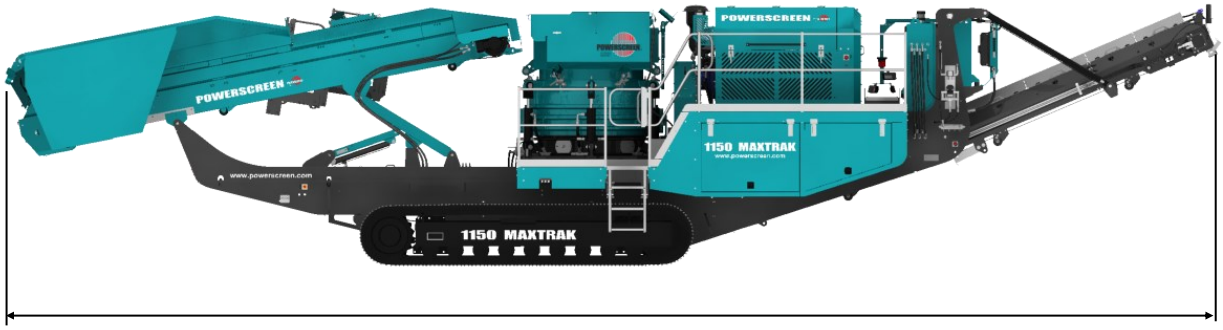

16.9m (55’ 5”)

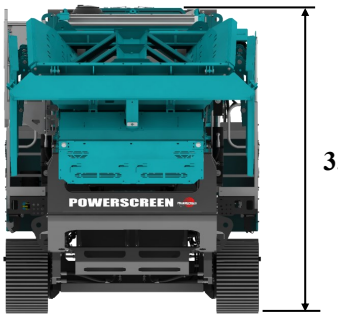

3.6m (11’ 10”)

3.0m (9’ 10”)

Approximate Plant Weights & Dimensions

Working length:	**16.4m**	**(53’ 10”)**
Working height:	**5.6m**	**(18’ 4”)**
Working width:	**4.5m**	**(14’ 9”) (With optional hopper extensions)**

1150 Maxtrak
Working Dimensions

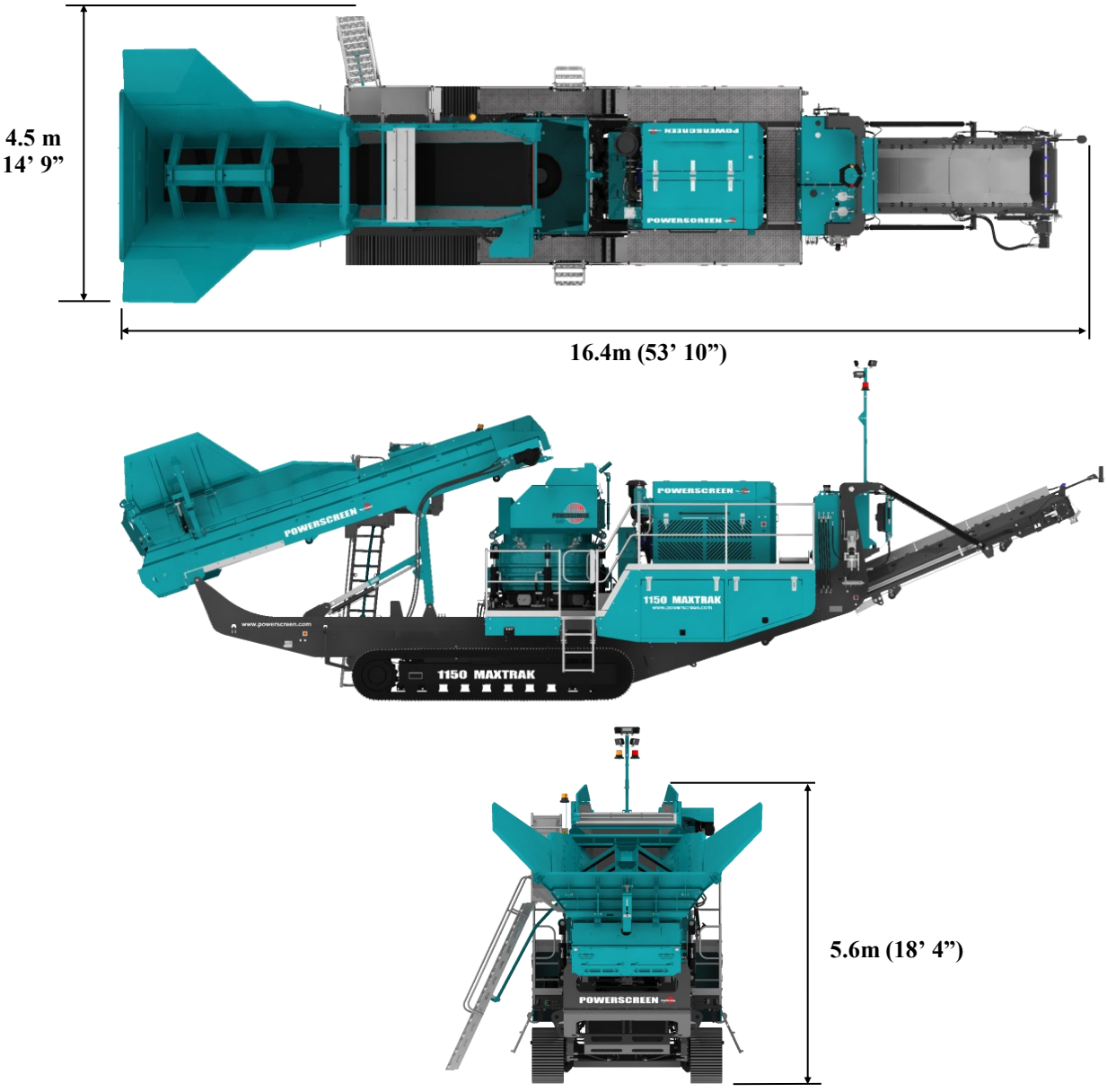

Powerscreen equipment complies with CE requirements.

Please consult Powerscreen if you have any other specific requirements in respect of guarding, noise or vibration levels, dust emissions, or any other factors relevant to health and safety measures or environmental protection needs. On receipt of specific requests, we will endeavour to ascertain the need for additional equipment and, if appropriate, quote extra to contract prices.

All reasonable steps have been taken to ensure the accuracy of this publication, however due to a policy of continual product development we reserve the right to change specifications without notice.

It is the importers' responsibility to check that all equipment supplied complies with local legislation regulatory requirements.

Plant performance figures given in this brochure are for illustration purposes only and will vary depending upon various factors, including feed material gradings and characteristics. Information relating to capacity or performance contained within this publication is not intended to be, nor will be, legally binding.

Terex GB Ltd.
200 Coalisland Road
Dungannon
Co. Tyrone
Northern Ireland
BT71 4DR

Tel: +44(0) 28 8774 0701
Fax: +44(0) 28 8774 6569

E-Mail: sales@powerscreen.com
Web: www.powerscreen.com

Terex is a registered trademark of Terex Corporation in the United States of America and many other countries.
Powerscreen is a registered trademark of Terex GB Ltd in the United States of America and many other countries.

Copyright Terex Corporation 2017