POWERSCREEN®
CW-80
WHEELED CONVEYOR

GET STARTED



TECHNICAL SPECIFICATION - REV 0 01/02/2021

To use my interactive features I need to be opened in 'Adobe Acrobat Reader' click here to download



CW-80 WHEELED CONVEYOR

- OVERVIEW
- FEEDBOOT
- DISCHARGE CONVEYOR
- CHASSIS OPTIONS
- POWER UNIT OPTIONS
- OPTIONS
- DIMENSIONS

OVERVIEW

SPECIFICATION

Total Weight		9,000kg (19,842bs)			
Transport Road	**Length**	16.17m (52’ 11’’)	**Transport Pit**	**Length**	16.55m (54’ 3’’)
	Height	3.36m (11’)		**Height**	3.95m (12’ 11’’)
	Width	2.5m (8’ 3”)		**Width**	3.1m (10’ 2”)
Working Road & Pit	**Drum Length**	22.85m (74’ 10’’)			
	Height	9.95m (32’ 7’’)			
	Width Road	4.48m (14’ 8”)			
	Width Pit	3.28m (10’ 9”)			
	Max Angle	23°			
Power Unit	CAT 18.4kW (24hp) or Honda 3.7kW (5hp)				
Plant Colour	Blue RAL 5021, Grey RAL 7024				

NOTE: Dimensions may differ slightly from sales drawings due to differences in angles / reference points.

FEATURES & BENEFITS

- High capacity up to 300tph (331 US tph).
- Maximum feed size up to 100mm (4’’).
- Single axle with dual wheels for increased stability in transport and reduced ground compaction.
- Road legal for American transport.
- Easy transport - two of these units can fit into a shipping container, and two can fit onto a trailer.
- Extended feedboot skirting to prevent spillage.
- Low level grease points for easy maintenance.
- Large canopy door for full access to the power unit.
- Braked axle.
- Mechanical engine with no after treatment.
- Lattice design for increased strength and reduced weight.
- High quality plough scraper.
- Filters are compatible with other Terex equipment for easy service.
- Optional radial hydraulic function available.
- Two emergency stops.

APPLICATIONS

Aggregate
Sand & gravel
Blasted rock
River rock

Recycling
C&D waste
Foundry waste

Mining
Processed ores
Processed minerals



CW-80 WHEELED CONVEYOR

- OVERVIEW
- FEEDBOOT
- DISCHARGE CONVEYOR
- CHASSIS OPTIONS
- POWER UNIT OPTIONS
- OPTIONS
- DIMENSIONS

FEEDBOOT

Standard Feedboot Capacity:	0.35 m^3 (0.43yd^3)
Feed in Width:	775mm (2’ 7”)
Extended Feedboot Capacity:	1.1m^3 (1.4yd^3)
Extended Feed in Width:	1658mm (5’ 2’’)
Standard Min Feed Height:	1534mm (5’)
Extended Min Feed Height:	1793mm (5’ 10”)





CW-80 WHEELED CONVEYOR

- OVERVIEW
- FEEDBOOT
- DISCHARGE CONVEYOR
- CHASSIS OPTIONS
- POWER UNIT OPTIONS
- OPTIONS
- DIMENSIONS

DISCHARGE CONVEYOR

Width:	900mm (36'')
Belt Centres:	22.85m (74' 10'')
Belt Type:	Plain
Belt Spec:	EP400 3 4+2
Motor Size:	15kW electric, OMV 500cc hydraulic
Drive Drum Dia:	293mm (11.5'')
Tail Drum Dia:	273mm (10.7'')
Max Speed:	76m/m (249 ft/min) Hydraulic, 89m/m (292 ft/min) Electric @50Hz
Operating Angle:	7° - 23°
Discharge Height @23° Conical Stockpile:	9.221m (30' 3'')
Discharge Radius:	20.958m (68' 9'')
0° Radial:	1,446m³ (2,313 Cu.Yd)
30° Radial:	2,684m³ (4,295 cu.yd)
60° Radial:	3,922m³ (6,275 cu.yd)
90° Radial:	5,160m³ (8,257 cu.yd)
120° Radial:	6,399m³ (10,238 cu.yd)
150° Radial:	7,637m³ (12,219 cu.yd)
180° Radial:	8,875m³ (14,200 cu.yd)
270° Radial:	12,590m³ (20,143 cu.yd)

Variable speed.





CW-80 WHEELED CONVEYOR

- OVERVIEW
- FEEDBOOT
- DISCHARGE CONVEYOR
- CHASSIS OPTIONS
- POWER UNIT OPTIONS
- OPTIONS
- DIMENSIONS

CHASSIS OPTIONS

ROAD CHASSIS

Wheel Radius: 398mm (15.7'')
No of Axles: 1
No of Studs: 8

Braked axle
Light board
Hydraulic kingpin jack legs (must have an engine selected).



PIT CHASSIS

Wheel Radius: 398mm (15.7'')
No of Axles: 1
No of Studs: 8



***NOTE* The customer must choose which chassis they require.**

When a road chassis is selected, if either a deployment or full engine is not selected then the user will lose the ability to choose either the single wheel drive option or the hydraulic jack leg option.



CW-80 WHEELED CONVEYOR

- OVERVIEW
- FEEDBOOT
- DISCHARGE CONVEYOR
- CHASSIS OPTIONS
- POWER UNIT OPTIONS
- OPTIONS
- DIMENSIONS

POWER UNIT OPTIONS

FULL ENGINE

Engine:	CAT 1.7
Power Rating:	18.4kW (24hp)
RPM:	2200rpm
Diesel Tank Capacity:	95L (25 US GAL)
Hydraulic Tank Capacity:	250L (66 US GAL)

DEPLOYMENT ENGINE

Engine:	Honda
Power Rating:	3.7kW (5hp)



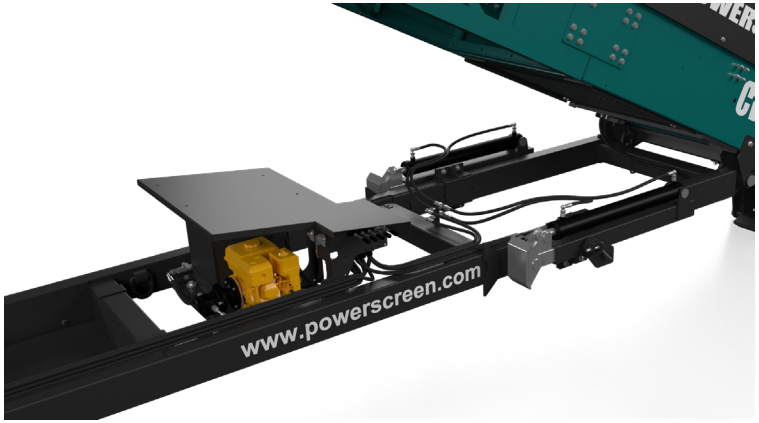

***NOTE* The customer has 4 options to choose from regarding how their unit is powered:**

1 - Via hydraulic coupling from another machine (ability to power all hydraulic functions without an on-board engine) - Standard offering.

2 - Electric drive as standard - plug into an external power source

3 - Full engine

4 - Deployment engine

When the electric option is chosen, the following options cannot be selected:

- Hydraulic fold over for transport

- Hydraulic angle adjust

If the standard electric option is selected, and the pull cord emergency stop options are selected, it is the customers responsibility to connect them to the power source.



CW-80 WHEELED CONVEYOR

- OVERVIEW
- FEEDBOOT
- DISCHARGE CONVEYOR
- CHASSIS OPTIONS
- POWER UNIT OPTIONS
- OPTIONS
- DIMENSIONS

OPTIONS

HYDRAULIC AXLE JACKING LEGS

The hydraulic axle jacking legs make it easy to convert the machine from towing mode to working / radial mode.



HYDRAULIC FEEDBOOT END TRANSPORT JACKING LEGS

The hydraulic feedboot end transport jacking legs make it convenient to raise and lower the machine for towing purposes.



OTHER OPTIONS

- Feedboot with removable 6mm steel wear liners
- Feedboot wear liners - 6mm AR400
- Feedboot extension with liners - Mild steel, 6mm AR400 or 20mm rubber
- High spec scraper at the head drum - plain belt only
- Chevron belt EP 315/3 Ply x 3 + 1.5 covers
- Heavy duty plain belt EP500/3 8 + 2 covers
- Conveyor under guard the length of mid-section
- Hydraulic fold over for transport - must select an engine
- Hydraulic angle adjust - must select an engine
- Manual radial functionality
- Canvas dust covers on conveyor (can be retrofitted)
- Spray bar at head drum
- Hydraulic axle jack legs - pit chassis only and an engine must be selected
- Single wheel drive - pit chassis only and an engine must be selected
- Towing eye - road chassis only
- ISO 68 hydraulic oil - an engine must be selected
- Emergency stops
- Pull cord emergency stop control panel side
- Pull cord emergency stop non control panel side
- Special paint colour



CW-80 WHEELED CONVEYOR

- OVERVIEW
- FEEDBOOT
- DISCHARGE CONVEYOR
- CHASSIS OPTIONS
- POWER UNIT OPTIONS
- OPTIONS
- DIMENSIONS

DIMENSIONS

Figure 1: Powerscreen CW-80
Working Position - Road

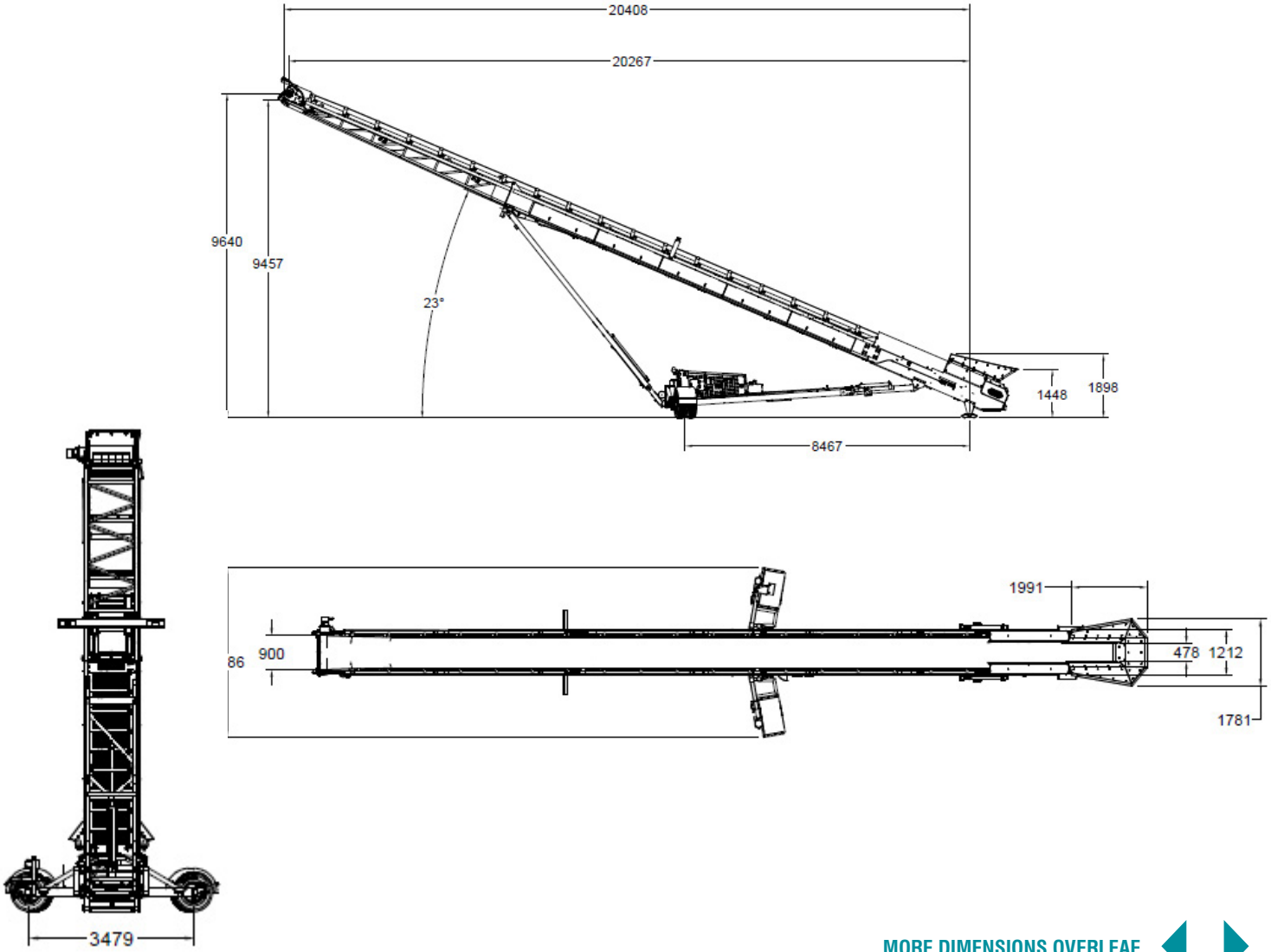

MORE DIMENSIONS OVERLEAF



CW-80 WHEELED CONVEYOR

- OVERVIEW
- FEEDBOOT
- DISCHARGE CONVEYOR
- CHASSIS OPTIONS
- POWER UNIT OPTIONS
- OPTIONS
- DIMENSIONS

DIMENSIONS

Figure 2: Powerscreen CW-80 Hydraulic
Working Position - Pit

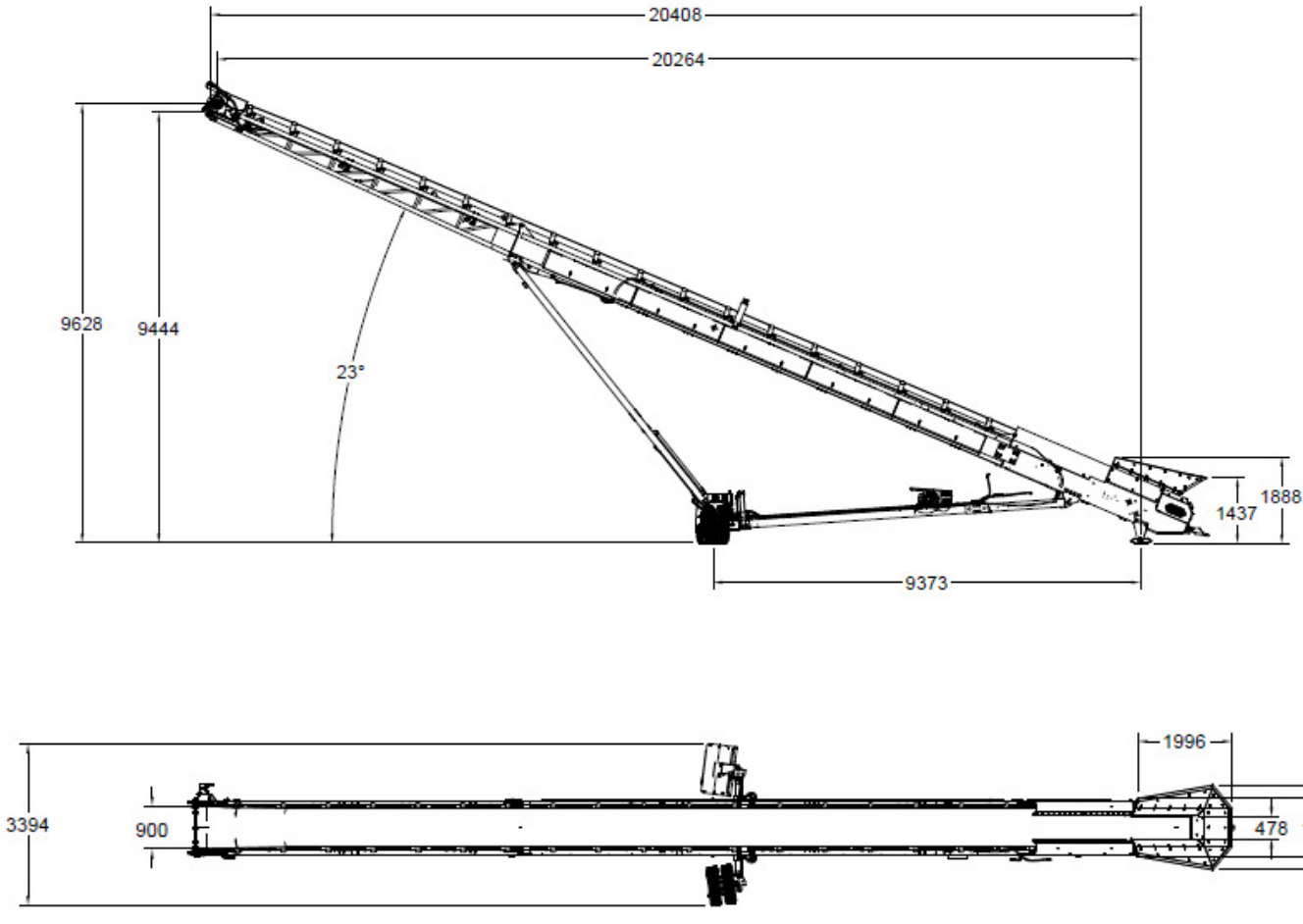

MORE DIMENSIONS OVERLEAF



CW-80 WHEELED CONVEYOR

- OVERVIEW
- FEEDBOOT
- DISCHARGE CONVEYOR
- CHASSIS OPTIONS
- POWER UNIT OPTIONS
- OPTIONS
- DIMENSIONS

DIMENSIONS

Figure 3: Powerscreen CW-80 Hydraulic
Transport Position - Road

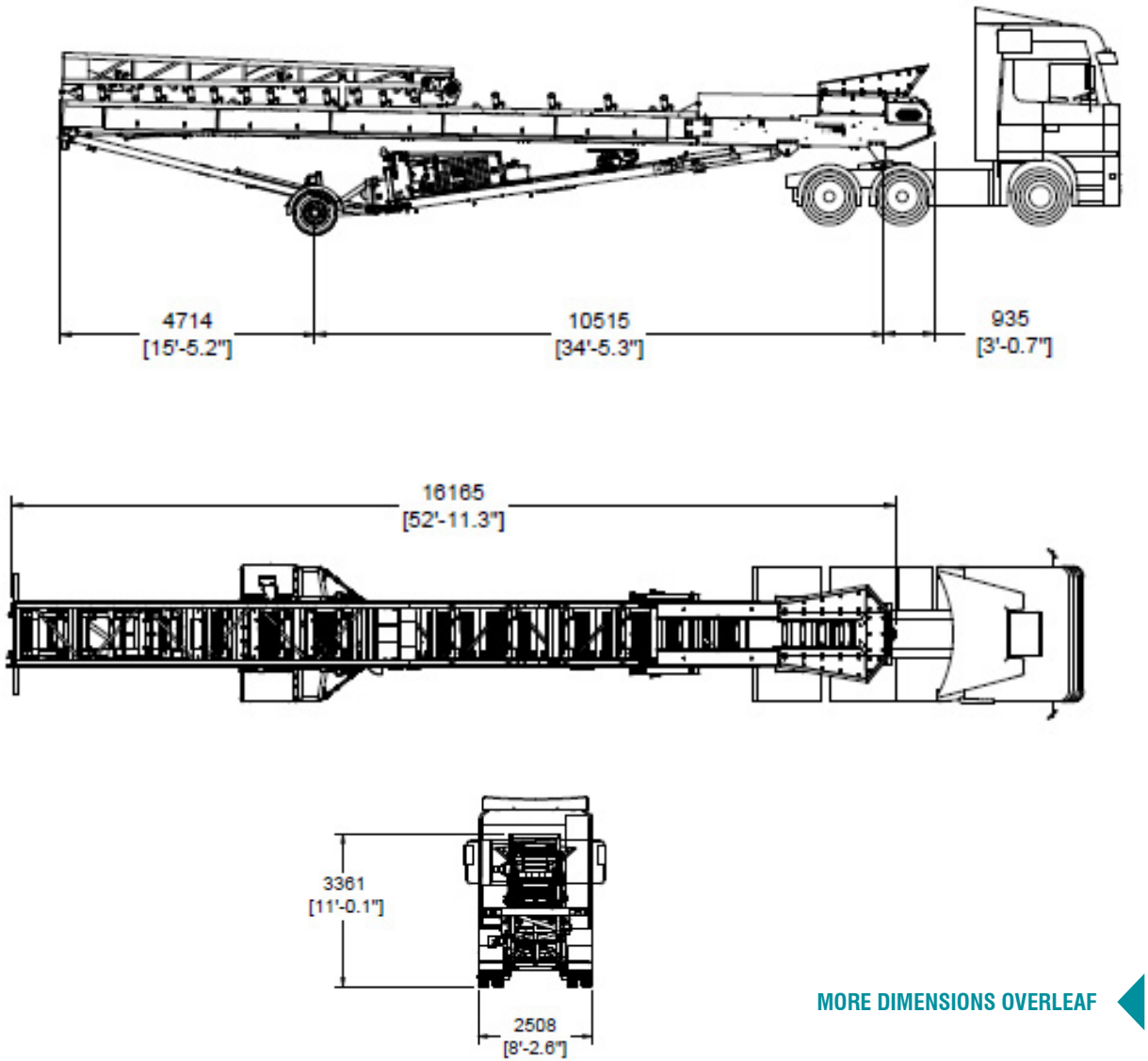

MORE DIMENSIONS OVERLEAF



CW-80 WHEELED CONVEYOR

- OVERVIEW
- FEEDBOOT
- DISCHARGE CONVEYOR
- CHASSIS OPTIONS
- POWER UNIT OPTIONS
- OPTIONS
- DIMENSIONS

DIMENSIONS

Figure 4: Powerscreen CW-80 Hydraulic
Transport Position - Pit

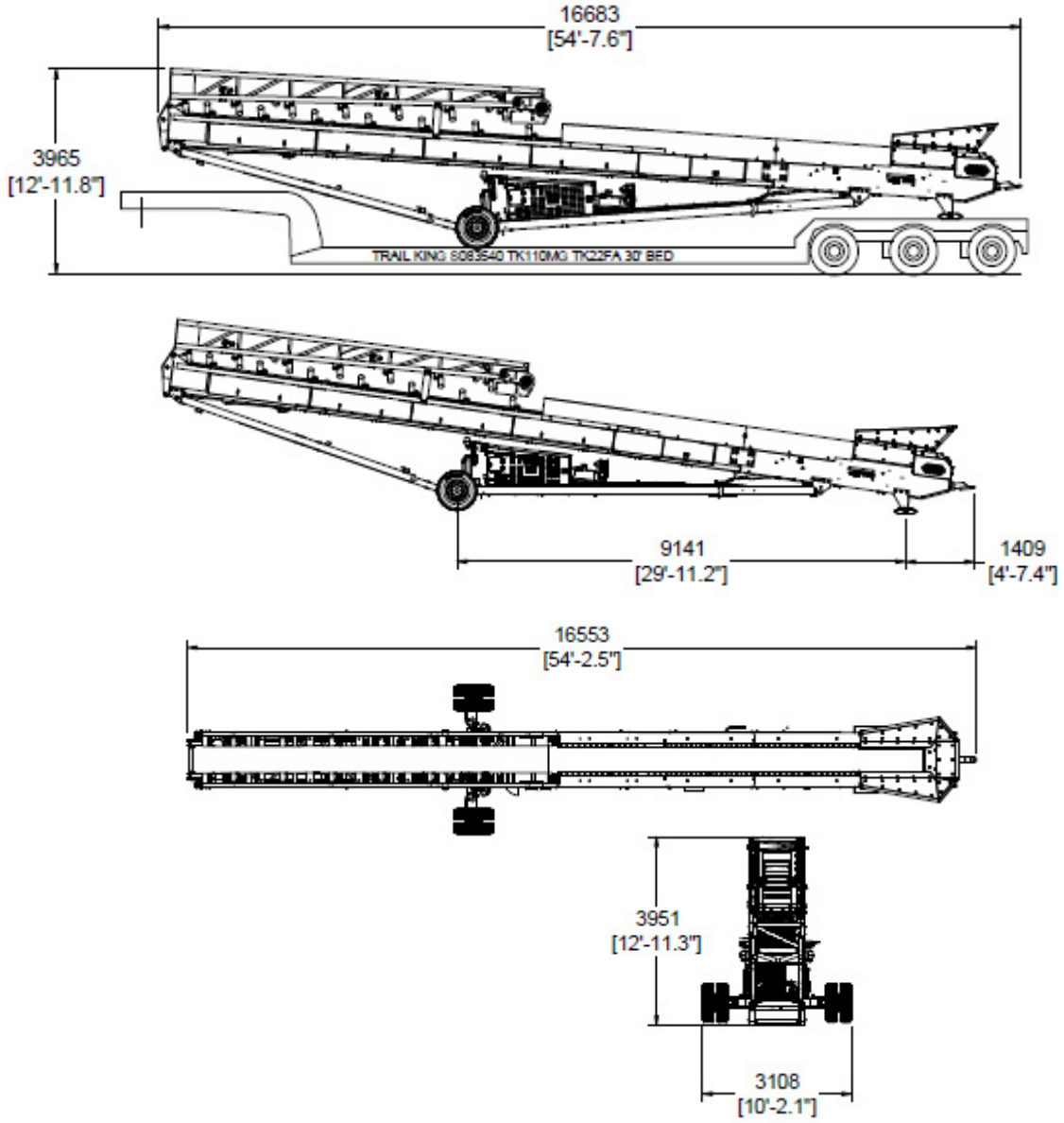

Powerscreen equipment complies with CE requirements.

Please consult Powerscreen if you have any other specific requirements in respect of guarding, noise or vibration levels, dust emissions, or any other factors relevant to health and safety measures or environmental protection needs. On receipt of specific requests, we will endeavour to ascertain the need for additional equipment and, if appropriate, quote extra to contract prices.

All reasonable steps have been taken to ensure the accuracy of this publication, however due to a policy of continual product development we reserve the right to change specifications without notice.

It is the importers' responsibility to check that all equipment supplied complies with local legislation regulatory requirements.

Plant performance figures given in this brochure are for illustration purposes only and will vary depending upon various factors, including feed material gradings and characteristics. Information relating to capacity or performance contained within this publication is not intended to be, nor will be, legally binding.

GET IN TOUCH

Dungannon
200 Coalisland Road, Dungannon,
Co Tyrone, BT71 4DR, Northern Ireland
Tel: +44 (0) 28 87 718 500
Fax: +44 (0) 28 87 747 231

Louisville
11001 Electron Drive,
Louisville, Kentucky, 40299 USA
Tel: +1 502 736 5200
Fax: +1 502 736 5202

www.powerscreen.com