POWERSCREEN®

HL-75

HIGH LEVEL FEEDER

GET STARTED



TECHNICAL SPECIFICATION - REV 2 01/02/2021

To use my interactive features I need to be opened in 'Adobe Acrobat Reader' click here to download



HL-75 HIGH LEVEL FEEDER

- OVERVIEW
- HOPPER & GRID
- FEED CONVEYOR
- DISCHARGE CONVEYOR
- TRACKS
- POWER UNIT & HYDRAULICS
- OPTIONS
- POWERSCREEN PULSE
- DIMENSIONS

OVERVIEW

SPECIFICATION

Total Weight	23,500kg (51,809bs)	
Transport	**Length**	19.5m (63')
	Height	3.12m (10' 2'')
	Width	2.75m (9')
Working @ 24º	**Length**	25.5m (83' 7'')
	Height	10.5m (34' 6'')
	Width	2.75m (9')
Power Unit	Tier 3: CAT 4.4 83kW (111hp) or, Tier 4F: CAT 4.4 82kW (110hp) or, Stage V: CAT 3.6 82kW (110hp)	
Plant Colour	Blue RAL 5021, Grey RAL 7024	

NOTE: Dimensions may differ slightly from sales drawings due to differences in angles / reference points.

FEATURES & BENEFITS

- High capacity up to 600tph (661 US tph).
- Maximum feed size up to 150mm (6'').
- Eliminates the need for wheeled loaders to create stockpiles - reduces labour and maintenance costs.
- Eliminates the need for handling material multiple times - reduces labour and maintenance costs.
- Improved material quality due to reduced compaction, degradation, segregation and contamination.
- Can except loads from an excavator, wheeled loader, crusher or screener.
- Multiple hopper options available depending on required capacities and operators loading methods or application.
- Rapid set up time and manoeuvrability around site.
- Reduced fuel consumption due to reduced reliance on wheeled loaders.
- Reduced wear on wheeled loaders where a conveyor is utilised.
- Hydraulic discharge height adjustment.
- Hydraulic fold over for transport.
- Rosta scraper.
- Kick out sensor stops feeder if discharge belt is under extreme load.
- Pinless deployment.
- Discharge conveyor head drum bearing automatic greasing.
- External conveyor belt adjustment.
- Engine pre-start delay & siren.
- Emergency stops x 3.

APPLICATIONS

Aggregate
Sand & gravel
Blasted rock
River rock

Recycling
C&D waste
Foundry waste

Mining
Processed ores
Processed minerals



HL-75 HIGH LEVEL FEEDER

- OVERVIEW
- HOPPER & GRID
- FEED CONVEYOR
- DISCHARGE CONVEYOR
- TRACKS
- POWER UNIT & HYDRAULICS
- OPTIONS
- POWERSCREEN PULSE
- DIMENSIONS

HOPPER & GRID

Grip Opening:	4750mm (15' 7'') x 2150mm (7' 1'')
Target Area (Without Grid):	4100mm (13' 5'') x 1633mm (5' 5'')
Grid Apertures:	108mm (4'')
Optional Grid Apertures:	73mm (3''), 126mm (5''), 151mm (6'')
Capacity (Tipping Grid Fitted):	7m³ (9.15 Cu.Yd.)
Capacity (No Tipping Grid Fitted):	6.4m³ (8.4 Cu.Yd.)
Rear Feed In Height Without Tipping Grid:	2.6m (8' 6'')
Rear Feed In Height With Tipping Grid:	3.2m (10' 6'')

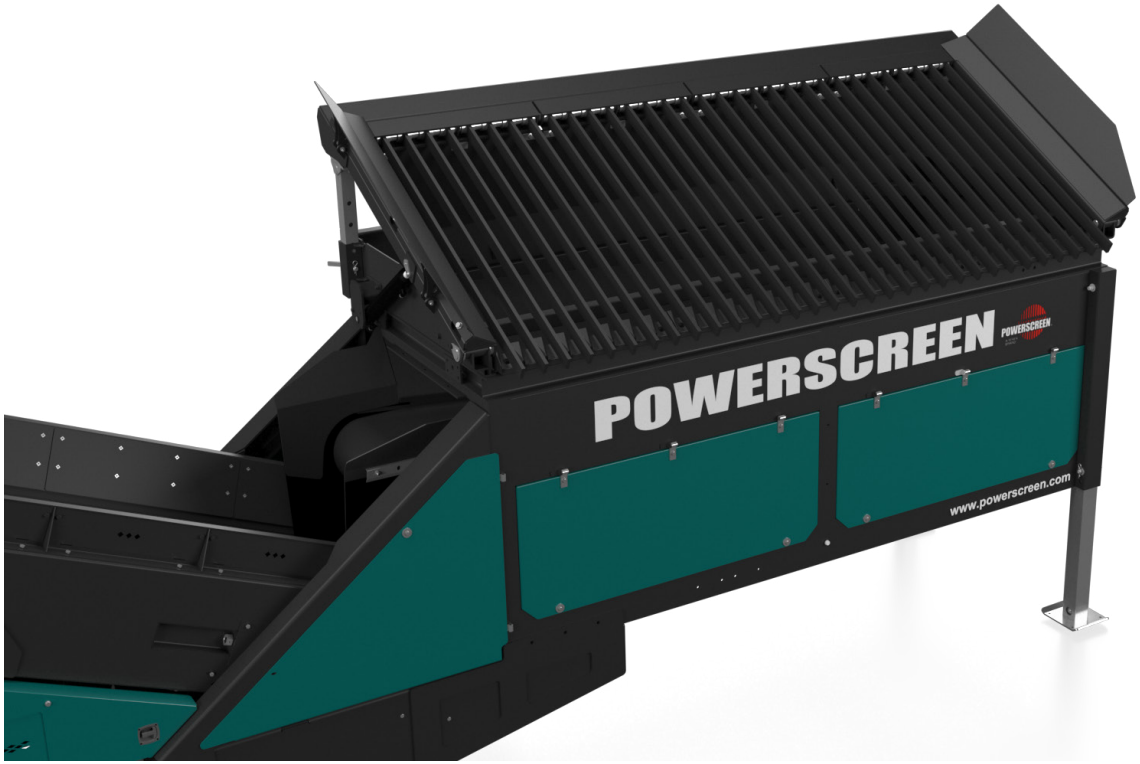



HL-75 HIGH LEVEL FEEDER

- OVERVIEW
- HOPPER & GRID
- FEED CONVEYOR
- DISCHARGE CONVEYOR
- TRACKS
- POWER UNIT & HYDRAULICS
- OPTIONS
- POWERSCREEN PULSE
- DIMENSIONS

FEED CONVEYOR

Width:	1200mm (48'')
Belt Type:	Plain
Belt Spec:	EP400/3 4+2
Variable Speed:	Yes





HL-75 HIGH LEVEL FEEDER

- OVERVIEW
- HOPPER & GRID
- FEED CONVEYOR
- DISCHARGE CONVEYOR
- TRACKS
- POWER UNIT & HYDRAULICS
- OPTIONS
- POWERSCREEN PULSE
- DIMENSIONS

DISCHARGE CONVEYOR

Width:	1200mm (48'')
Belt Centres:	22.5m (73' 10")
Belt Type:	Plain
Belt Spec:	EP400 3 4+2
Drive Drum Dia:	345mm (13.6'')
Tail Drum Dia:	320mm (12.6'')
Max Belt Speed:	113m/m
Motor Size:	630cc
Operating Angle:	5° - 24°
Discharge Height @18°:	8m (26' 3'')
Stockpile Capacity @18° & 37° Angle of Repose:	944m³ (1235 Cu.Yd)
Discharge Height @24°:	9.8m (32' 2'')
Stockpile Capacity @24° & 37° Angle of Repose:	1735m³ (2270 Cu.Yd)
Variable Speed:	Yes

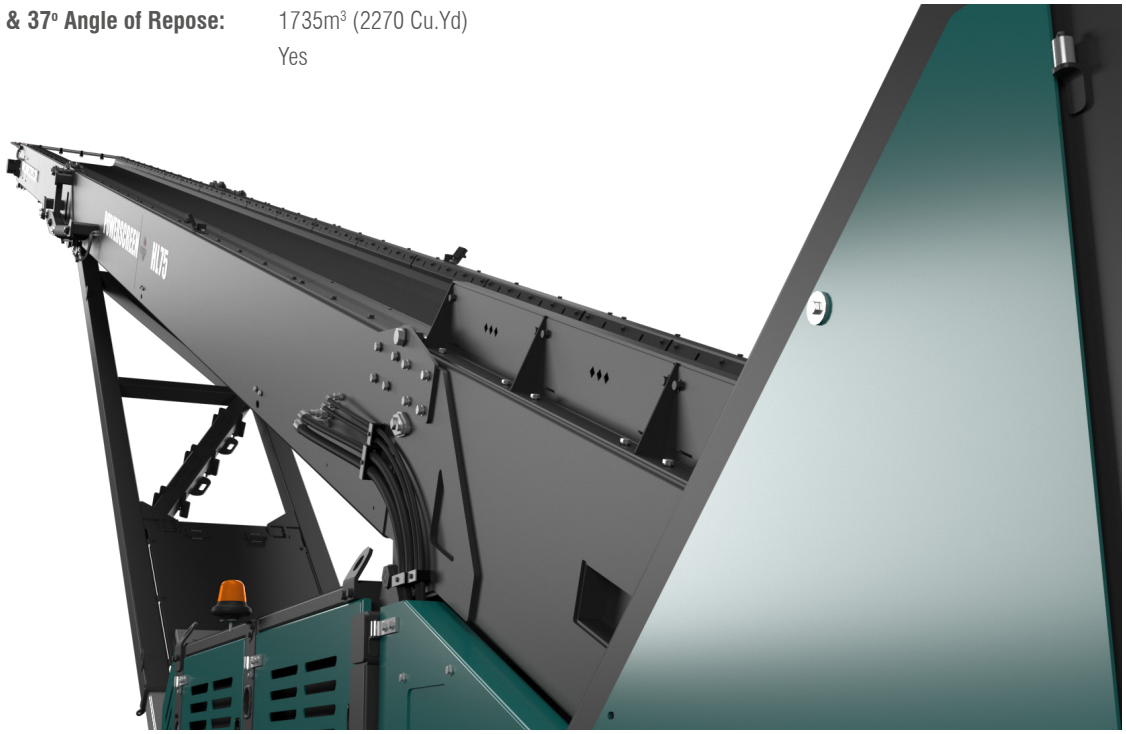



HL-75 HIGH LEVEL FEEDER

- OVERVIEW
- HOPPER & GRID
- FEED CONVEYOR
- DISCHARGE CONVEYOR
- TRACKS
- POWER UNIT & HYDRAULICS
- OPTIONS
- POWERSCREEN PULSE
- DIMENSIONS

TRACKS

Shoe Width:	400mm (1' 4'')
Sprocket Centre:	4300mm (14' 1")
Outer Width:	2750mm (9')
Gradability:	45.9º
Speed:	0.6km/h
Speed High:	1.1km/h
Speed High:	68Lpm (Per track)





HL-75 HIGH LEVEL FEEDER

- OVERVIEW
- HOPPER & GRID
- FEED CONVEYOR
- DISCHARGE CONVEYOR
- TRACKS
- POWER UNIT & HYDRAULICS
- OPTIONS
- POWERSCREEN PULSE
- DIMENSIONS

POWER UNIT & HYDRAULICS

Engine (Tier 3):	CAT C4.4
Power Rating:	83kW (111hp)
RPM:	1800rpm
Crankshaft Pump:	38/38/8

Engine (Tier 4F):	CAT C4.4
Power Rating:	82kW (110hp)
RPM:	1800rpm
Crankshaft Pump:	38/38/8

Engine (Stage V):	CAT C3.6
Power Rating:	82kW (110hp)
RPM:	1800rpm
Crankshaft Pump:	38/38/8

Diesel Tank Capacity:	325L (86 US GAL)
Hydraulic Tank Capacity T3:	360L (95 US GAL)
Hydraulic Tank Capacity T4:	360L (95 US GAL)





HL-75 HIGH LEVEL FEEDER

- OVERVIEW
- HOPPER & GRID
- FEED CONVEYOR
- DISCHARGE CONVEYOR
- TRACKS
- POWER UNIT & HYDRAULICS
- OPTIONS
- POWERSCREEN PULSE
- DIMENSIONS

OPTIONS

DOUBLE DECK VIBRATING GRID

Type of Grid:	3.1m x 2.45m (10' 2'' x 8') 2 Deck Vibrating Grid
Target Area:	3.91m x 2.42m (12' 9'' x 7' 11'')
Grid Opening:	3.03m x 2.17m (9' 11'' x 7' 1'')
Top Deck Type:	Tapered Bofor Bar
Standard Aperture:	90mm tapering to 110m (4'')
Optional Apertures:	110mm - 130mm (5'')
Bottom Deck Type:	Woven steel mesh
Standard Aperture:	38mm (1.5'')
Working Angle:	10º - 20º
Tip Angle:	45º
Rear Feed In Height:	3800mm (12' 5'') @ 10º / 4150mm (13' 7'') @ 20º
Weight:	5500kg (12,125lbs)
Speed:	1050rpm
Throw:	4.5mm
G Force:	2.77G
Increase In Transport Height:	+135mm (5.5'')

OTHER OPTIONS

- Dust hood.
- Canvas dust covers complete with dust hood on discharge conveyor.
- Twin drive discharge conveyor (Recommended to also select ceramic head drum option).
- Full length skirting rubber along discharge conveyor.
- High spec head drum scraper on discharge conveyor (plain belt only).
- Anti-roll back flaps.
- Heavy duty plain discharge belt EP500 4 Ply x 8 + 2 covers.
- Ceramic lagging on discharge conveyor drive drum.
- Ceramic lagging on feed conveyor drive drum.
- Discharge conveyor under guard for mid-section.
- Dust suppression (spray bars only).
- Belt weigher.
- Overband magnet on discharge conveyor complete with hydraulic kit and support frames.
- Radio remote to start / stop feeder, raise / lower discharge conveyor & tipping grid if selected
- Pull cord E-Stop running the length of the conveyor.
- Radio remote control for tracking.
- Feedboot lined AR400 6mm wear plate.
- 6mm mild steel liners bolted into hopper.
- 6mm AR400 wear plate liners in hopper.
- Twin drive feed conveyor.
- 4'' or 6'' tipping grid fitted to feed conveyor.
- Integrated fall break system bolted into hopper.
- 500mm (20'') hopper extensions with fall break system in hopper.
- 700mm (28'') hopper extensions with fall break system in hopper.
- Machine prepped hydraulically to tip a grid including remote control (no grid supplied).
- Machine prepped hydraulically for DDVG including remote control (no DDVG supplied).
- Discharge conveyor chevron belt EP315 3 ply 3 + 1.5 covers.
- Grade ISO 68 hydraulic oil (recommended for ambient temperatures between +15 and +50 degrees Celsius).
- Grease lines to head drum.
- Hybrid configuration.
- Powerscreen Pulse.



HL-75 HIGH LEVEL FEEDER

- OVERVIEW
- HOPPER & GRID
- FEED CONVEYOR
- DISCHARGE CONVEYOR
- TRACKS
- POWER UNIT & HYDRAULICS
- OPTIONS
- POWERSCREEN PULSE
- DIMENSIONS

POWERSCREEN PULSE

RECORD, DISPLAY AND ANALYSE DATA:

HIGH EFFICIENCY THROUGH PRECISE INFORMATION

Available online anywhere and at any time: comprehensive information on the GPS location, start and stop times, fuel consumption, tonnages, cone settings, wear ratings, operating hours, maintenance status, and much more.



AVAILABLE ANYWHERE AND AT ANY TIME

DASHBOARD DISPLAY

FLEET OVERVIEW

WEEKLY REPORT DIRECT TO YOUR INBOX

GPS: MACHINE TRACKING

REPORTING
UTILISATION, PERFORMANCE & PART SPECIFIC





HL-75 HIGH LEVEL FEEDER

- OVERVIEW
- HOPPER & GRID
- FEED CONVEYOR
- DISCHARGE CONVEYOR
- TRACKS
- POWER UNIT & HYDRAULICS
- OPTIONS
- POWERSCREEN PULSE
- DIMENSIONS

DIMENSIONS

Figure 1: Powerscreen HL-75
Working Position

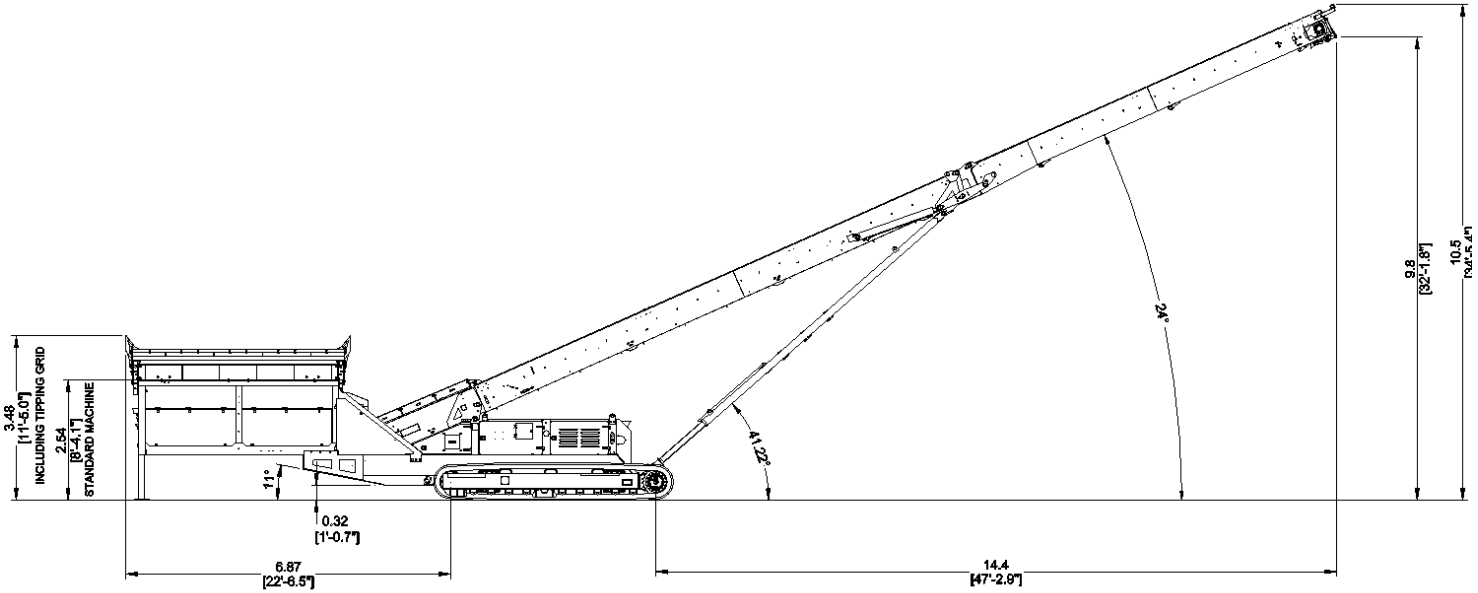

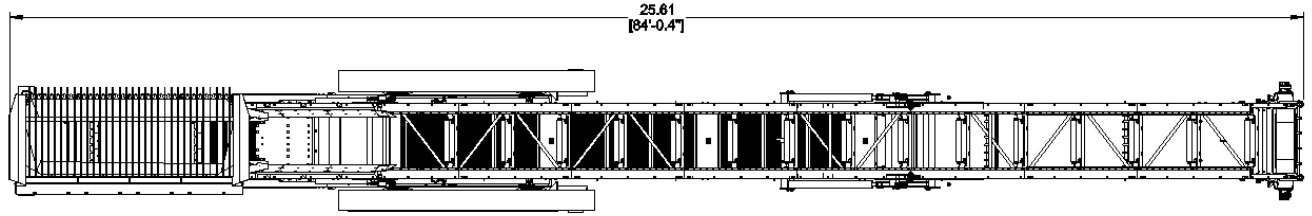

MORE DIMENSIONS OVERLEAF



HL-75 HIGH LEVEL FEEDER

- OVERVIEW
- HOPPER & GRID
- FEED CONVEYOR
- DISCHARGE CONVEYOR
- TRACKS
- POWER UNIT & HYDRAULICS
- OPTIONS
- POWERSCREEN PULSE
- DIMENSIONS

DIMENSIONS

Figure 2: Powerscreen HL-75
Working Position

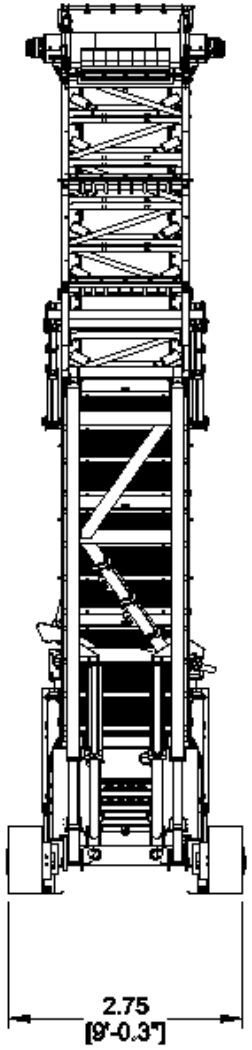

MORE DIMENSIONS OVERLEAF



HL-75 HIGH LEVEL FEEDER

- OVERVIEW
- HOPPER & GRID
- FEED CONVEYOR
- DISCHARGE CONVEYOR
- TRACKS
- POWER UNIT & HYDRAULICS
- OPTIONS
- POWERSCREEN PULSE
- DIMENSIONS

DIMENSIONS

Figure 3: Powerscreen HL-75 Tipping Grid
Transport Position

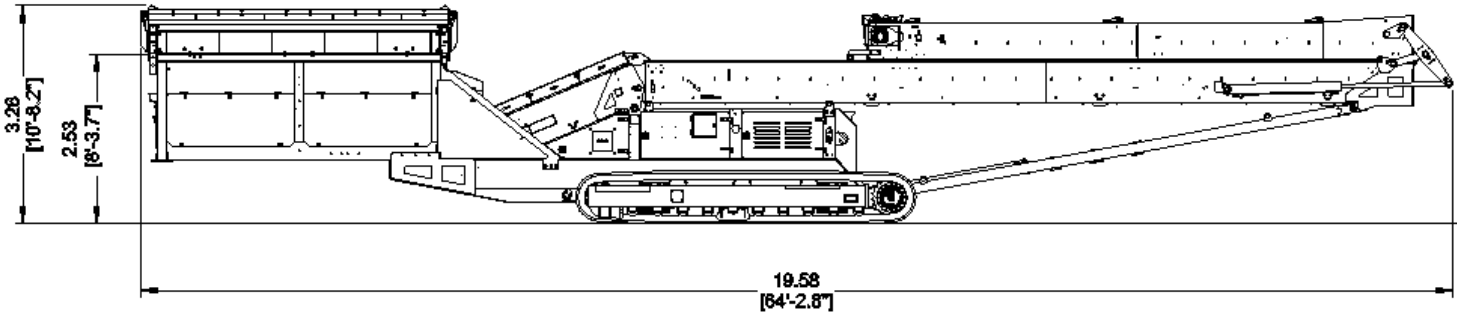

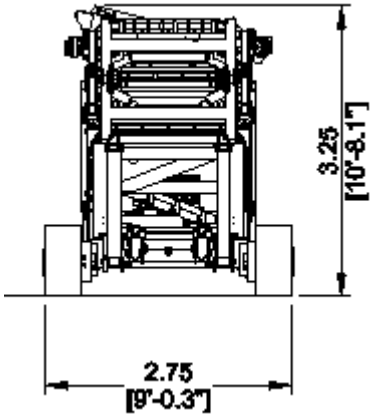

MORE DIMENSIONS OVERLEAF



HL-75 HIGH LEVEL FEEDER

- OVERVIEW
- HOPPER & GRID
- FEED CONVEYOR
- DISCHARGE CONVEYOR
- TRACKS
- POWER UNIT & HYDRAULICS
- OPTIONS
- POWERSCREEN PULSE
- DIMENSIONS

DIMENSIONS

Figure 4: Powerscreen HL-75 Double Deck Vibrating Grid
Transport Position

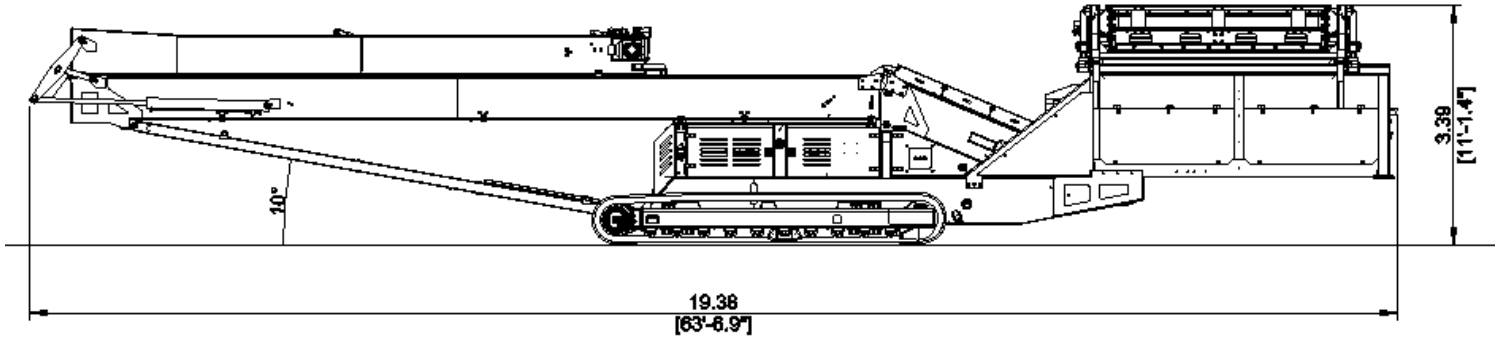

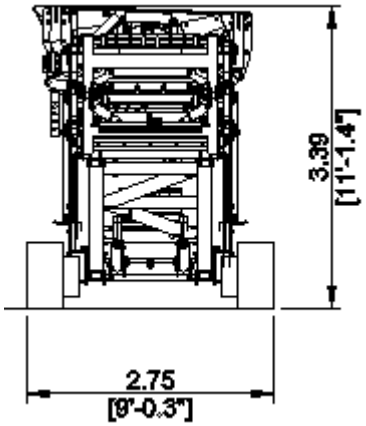

MORE DIMENSIONS OVERLEAF

Powerscreen equipment complies with CE requirements.

Please consult Powerscreen if you have any other specific requirements in respect of guarding, noise or vibration levels, dust emissions, or any other factors relevant to health and safety measures or environmental protection needs. On receipt of specific requests, we will endeavour to ascertain the need for additional equipment and, if appropriate, quote extra to contract prices.

All reasonable steps have been taken to ensure the accuracy of this publication, however due to a policy of continual product development we reserve the right to change specifications without notice.

It is the importers' responsibility to check that all equipment supplied complies with local legislation regulatory requirements.

Plant performance figures given in this brochure are for illustration purposes only and will vary depending upon various factors, including feed material gradings and characteristics. Information relating to capacity or performance contained within this publication is not intended to be, nor will be, legally binding.

GET IN TOUCH

Dungannon
200 Coalisland Road, Dungannon,
Co Tyrone, BT71 4DR, Northern Ireland
Tel: +44 (0) 28 87 718 500
Fax: +44 (0) 28 87 747 231

Louisville
11001 Electron Drive,
Louisville, Kentucky, 40299 USA
Tel: +1 502 736 5200
Fax: +1 502 736 5202

www.powerscreen.com