POWERSCREEN®

LL-75

LOW LEVEL FEEDER

GET STARTED



TECHNICAL SPECIFICATION - REV 2 01/02/2021

To use my interactive features I need to be opened in 'Adobe Acrobat Reader' click here to download



LL-75 LOW LEVEL FEEDER

- OVERVIEW
- HOPPER
- FEED CONVEYOR
- DISCHARGE CONVEYOR
- TRACKS
- POWER UNIT & HYDRAULICS
- OPTIONS
- POWERSCREEN PULSE
- DIMENSIONS

OVERVIEW

SPECIFICATION

Total Weight		24,700kg (41,454bs)
Transport	**Length**	19.74m (64' 9'')
	Height	3.35m (11')
	Width	2.75m (9')
Working @ 24º	**Length**	25.8m (84' 9'')
	Height	10.1m (33' 2'')
	Width	3.61m (11' 10'')
Power Unit		Tier 3: CAT 4.4 83kW (111hp) or, Tier 4F: CAT 4.4 82kW (110hp) or, Stage V: CAT 3.6 82kW (110hp)
Plant Colour		Blue RAL 5021, Grey RAL 7024

NOTE: Dimensions may differ slightly from sales drawings due to differences in angles / reference points.etc.

FEATURES & BENEFITS

- High capacity up to 600tph (661 US tph).
- Maximum feed size up to 150mm (6'').
- Eliminates the need for wheeled loaders to create stockpiles - reduces labour and maintenance costs.
- Eliminates the need for handling material multiple times - reduces labour and maintenance costs.
- Improved material quality due to reduced compaction, degradation, segregation and contamination.
- Can except loads from an excavator, wheeled loader, crusher or screener.
- Can be loaded from 3 sides, ensuring versatility.
- Rapid set up time and manoeuvrability around site.
- Low feed in height giving increased productivity and safety.
- Unrestricted discharge at front of hopper - ideal for bulky materials.
- Reduced fuel consumption due to reduced reliance on wheeled loaders.
- Reduced wear on wheeled loaders where a conveyor is utilised.
- Hydraulic discharge height adjustment.
- Hydraulic fold over for transport.
- Rosta scraper.
- Kick out sensor stops feeder if discharge belt is under extreme load.
- Pinless deployment.
- Discharge conveyor head drum bearing automatic greasing.
- External conveyor belt adjustment.
- Engine pre-start delay & siren.
- Emergency stops x 2.

APPLICATIONS

Aggregate
Sand & gravel
Blasted rock
River rock

Recycling
C&D waste
Foundry waste

Mining
Processed ores
Processed minerals



LL-75 LOW LEVEL FEEDER

- OVERVIEW
- HOPPER
- FEED CONVEYOR
- DISCHARGE CONVEYOR
- TRACKS
- POWER UNIT & HYDRAULICS
- OPTIONS
- POWERSCREEN PULSE
- DIMENSIONS

HOPPER

Target Area (Flares Down):	4.7m (15' 5'') x 2.6m (8' 6'')
Target Area (Flares Up):	4.7m (15' 5'') x 3.49m (11' 5'')
Capacity:	$7m^3$ (9.15 Cu.Yd.)
Feed In Height:	1.9m (6' 3'')

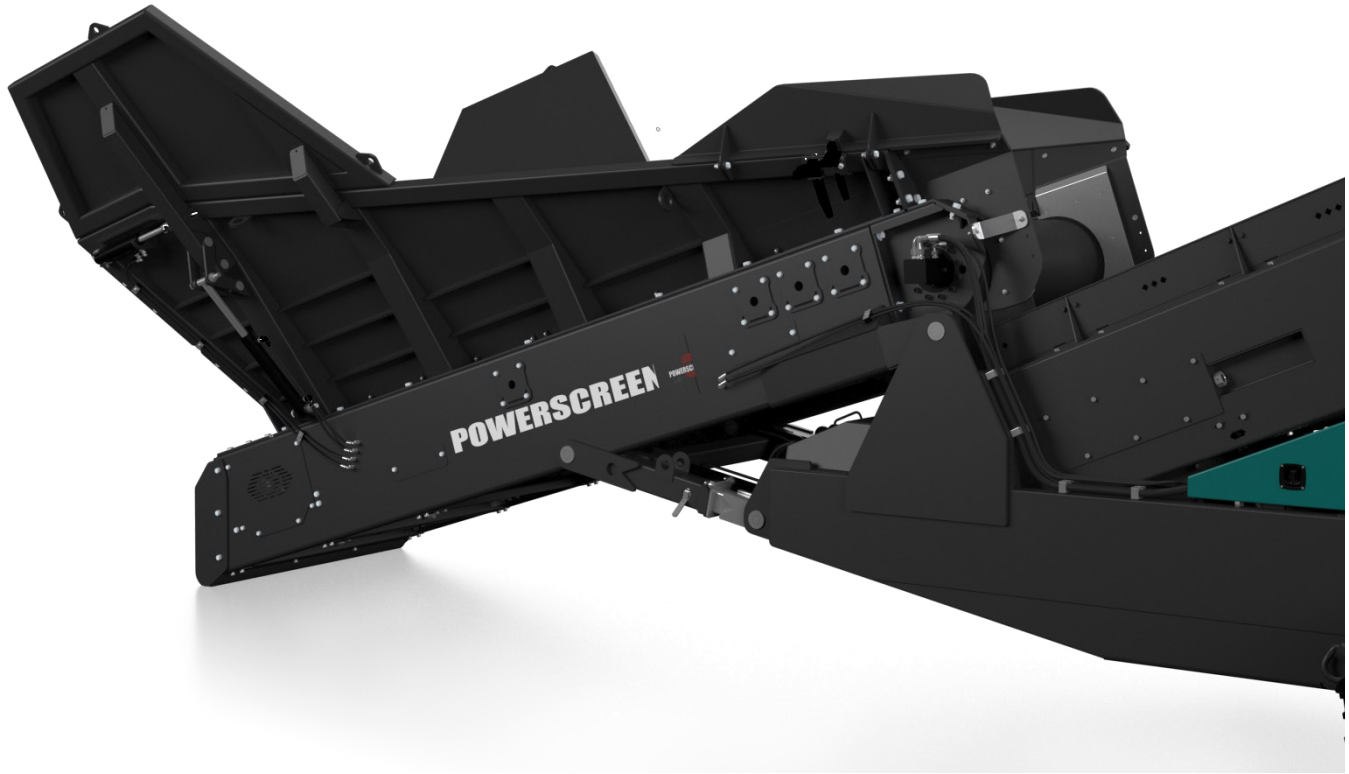



LL-75 LOW LEVEL FEEDER

- OVERVIEW
- HOPPER
- FEED CONVEYOR
- DISCHARGE CONVEYOR
- TRACKS
- POWER UNIT & HYDRAULICS
- OPTIONS
- POWERSCREEN PULSE
- DIMENSIONS

FEED CONVEYOR

Width:	1300mm (4' 3'')
Belt Type:	Plain
Belt Spec:	EP400/3 4+2
Variable Speed:	Yes





LL-75 LOW LEVEL FEEDER

- OVERVIEW
- HOPPER
- FEED CONVEYOR
- DISCHARGE CONVEYOR
- TRACKS
- POWER UNIT & HYDRAULICS
- OPTIONS
- POWERSCREEN PULSE
- DIMENSIONS

DISCHARGE CONVEYOR

Width:	1200mm (48'')
Belt Centres:	22.5m (73' 10")
Belt Type:	Plain
Belt Spec:	EP400 3 4+2
Drive Drum Dia:	345mm (13.6'')
Tail Drum Dia:	320mm (12.6'')
Max Belt Speed:	113m/m
Motor Size:	630cc
Operating Angle:	5° - 24°
Discharge Height @18°:	8m (26' 3'')
Stockpile Capacity @18° & 37° Angle of Repose:	944m³ (1235 Cu.Yd)
Discharge Height @24°:	9.8m (32' 2'')
Stockpile Capacity @24° & 37° Angle of Repose:	1735m³ (2270 Cu.Yd)
Variable Speed:	Yes

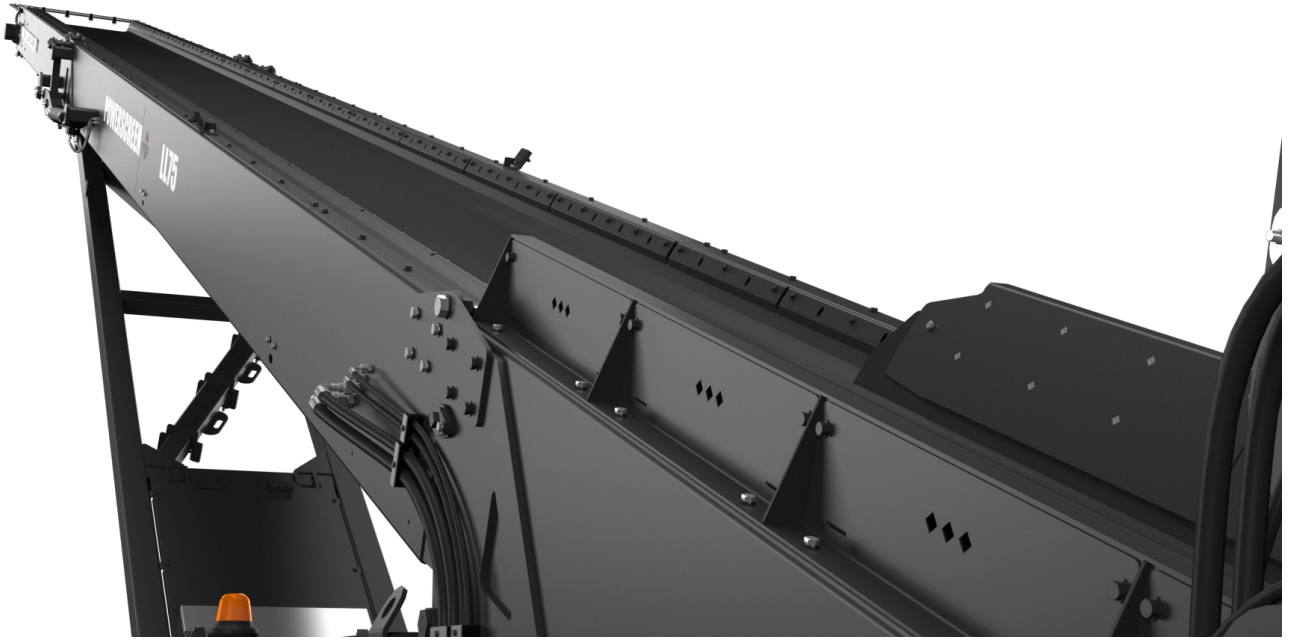



LL-75 LOW LEVEL FEEDER

- OVERVIEW
- HOPPER
- FEED CONVEYOR
- DISCHARGE CONVEYOR
- TRACKS
- POWER UNIT & HYDRAULICS
- OPTIONS
- POWERSCREEN PULSE
- DIMENSIONS

TRACKS

Shoe Width:	400mm (1' 4'')
Sprocket Centre:	4300mm (14' 1")
Outer Width:	2750mm (9')
Gradability:	45.9º
Speed:	0.6km/h
Speed High:	1.1km/h
Speed High:	68Lpm (Per track)





LL-75 LOW LEVEL FEEDER

- OVERVIEW
- HOPPER
- FEED CONVEYOR
- DISCHARGE CONVEYOR
- TRACKS
- POWER UNIT & HYDRAULICS
- OPTIONS
- POWERSCREEN PULSE
- DIMENSIONS

POWER UNIT & HYDRAULICS

Engine (Tier 3):	CAT C4.4
Power Rating:	83kW (111hp)
RPM:	1800rpm
Crankshaft Pump:	38/38/8

Engine (Tier 4F):	CAT C4.4
Power Rating:	82kW (110hp)
RPM:	1800rpm
Crankshaft Pump:	38/38/8

Engine (Stage V):	CAT C3.6
Power Rating:	82kW (110hp)
RPM:	1800rpm
Crankshaft Pump:	38/38/8

Diesel Tank Capacity:	325L (86 US GAL)
Hydraulic Tank Capacity T3:	360L (95 US GAL)
Hydraulic Tank Capacity T4:	360L (95 US GAL)





LL-75 LOW LEVEL FEEDER

- OVERVIEW
- HOPPER
- FEED CONVEYOR
- DISCHARGE CONVEYOR
- TRACKS
- POWER UNIT & HYDRAULICS
- OPTIONS
- POWERSCREEN PULSE
- DIMENSIONS

OPTIONS

- Dust hood.
- Canvas dust covers complete with dust hood on discharge conveyor.
- Full length skirting rubber on discharge conveyor.
- High spec head drum scraper on discharge conveyor (plain belt only).
- Anti-roll back flaps.
- Heavy duty plain belt on discharge conveyor EP500 4 Ply x 8 + 2 covers.
- Twin drive discharge conveyor (Recommended to also select ceramic lagging on head drum).
- Ceramic lagging on discharge conveyor drive drum.
- Discharge conveyor under guard length of mid-section.
- Dust suppression (spray bars only).
- Belt weigher.
- Overband magnet on discharge conveyor complete with hydraulic kit and support frames.
- Radio remote to start / stop feeder, raise / lower discharge conveyor.
- Pull cord E-Stop running the length of the conveyor.
- Feedboot lined with AR400 6mm wear plate.
- Manual adjusting jacking legs at tail side of feeder to adjust tail height.
- Ceramic lagging on feed conveyor drive drum.
- Hopper lined with AR400 6mm wear plate.
- Hopper flares lined with AR400 6mm wear plate.
- 6mm mild steel liners bolted into hopper.
- Chevron belt for discharge conveyor EP315 3 Ply x 3 + 1.5 covers
- Grade ISO 68 hydraulic oil (recommended for ambient temperatures of +15 - +50 degrees Celsius).
- Larger capacity hopper.
- Hybrid configuration.
- Grease lines to head drum.
- Radio remote for tracking.
- Powerscreen Pulse.





LL-75 LOW LEVEL FEEDER

- OVERVIEW
- HOPPER
- FEED CONVEYOR
- DISCHARGE CONVEYOR
- TRACKS
- POWER UNIT & HYDRAULICS
- OPTIONS
- POWERSCREEN PULSE
- DIMENSIONS

POWERSCREEN PULSE

RECORD, DISPLAY AND ANALYSE DATA:

HIGH EFFICIENCY THROUGH PRECISE INFORMATION

Available online anywhere and at any time: comprehensive information on the GPS location, start and stop times, fuel consumption, tonnages, cone settings, wear ratings, operating hours, maintenance status, and much more.



AVAILABLE ANYWHERE AND AT ANY TIME

DASHBOARD DISPLAY

FLEET OVERVIEW

WEEKLY REPORT DIRECT TO YOUR INBOX

GPS: MACHINE TRACKING

REPORTING
UTILISATION, PERFORMANCE & PART SPECIFIC





LL-75 LOW LEVEL FEEDER

- OVERVIEW
- HOPPER
- FEED CONVEYOR
- DISCHARGE CONVEYOR
- TRACKS
- POWER UNIT & HYDRAULICS
- OPTIONS
- POWERSCREEN PULSE
- DIMENSIONS

DIMENSIONS

Figure 1: Powerscreen LL-75
Working Position

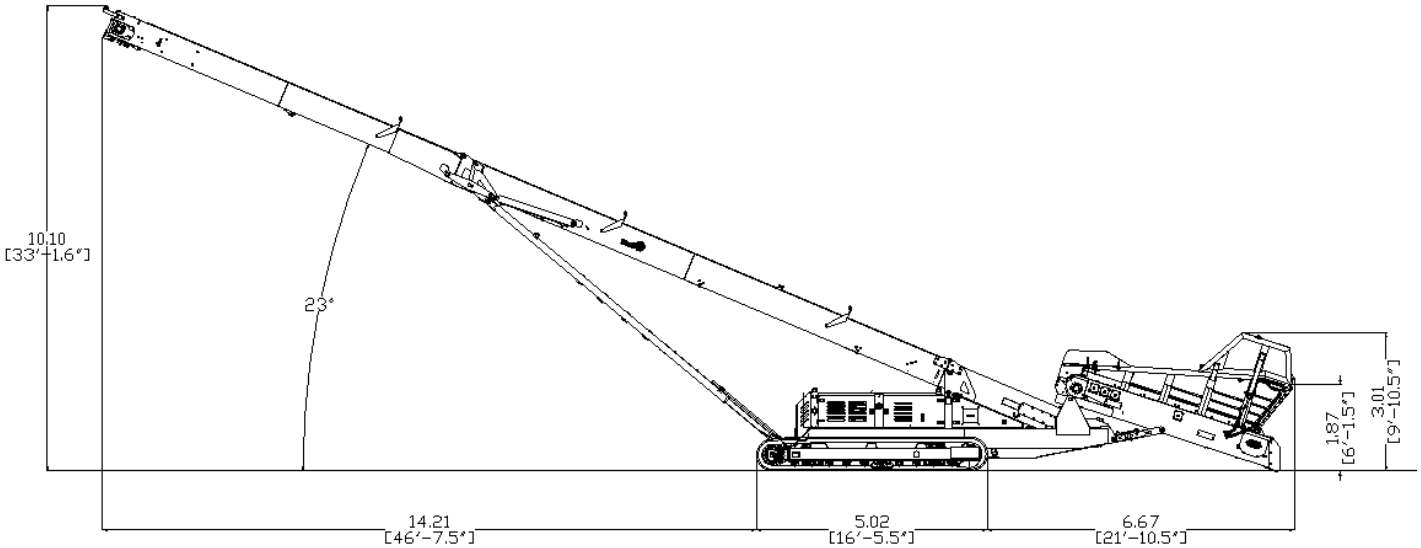

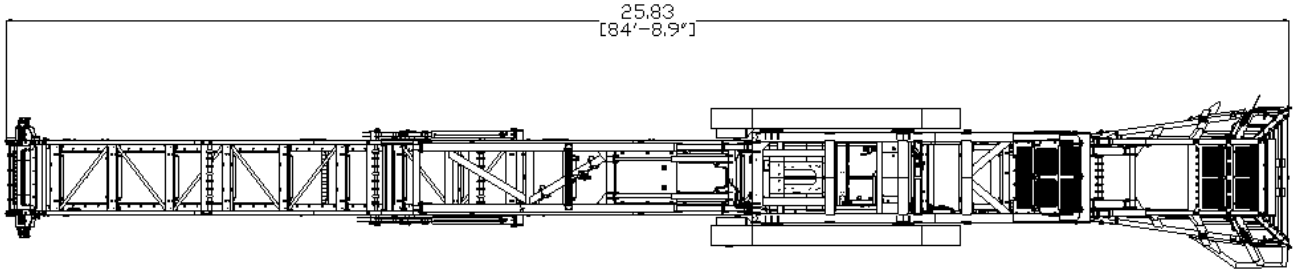

MORE DIMENSIONS OVERLEAF



LL-75 LOW LEVEL FEEDER

- OVERVIEW
- HOPPER
- FEED CONVEYOR
- DISCHARGE CONVEYOR
- TRACKS
- POWER UNIT & HYDRAULICS
- OPTIONS
- POWERSCREEN PULSE
- DIMENSIONS

DIMENSIONS

Figure 2: Powerscreen LL-75
Working Position

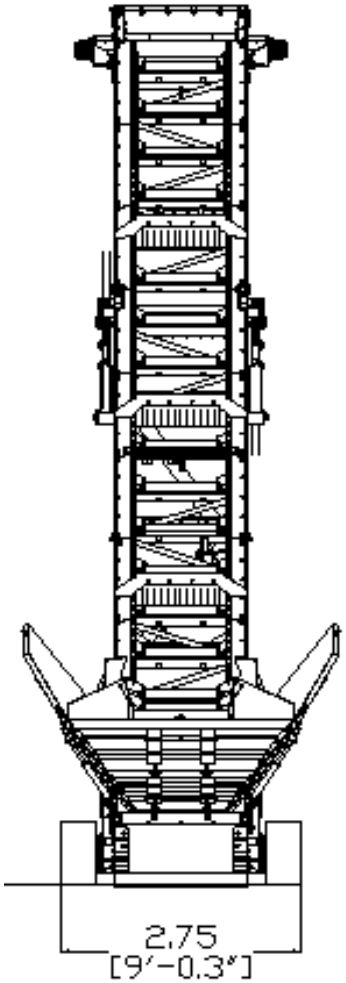

MORE DIMENSIONS OVERLEAF



LL-75 LOW LEVEL FEEDER

- OVERVIEW
- HOPPER
- FEED CONVEYOR
- DISCHARGE CONVEYOR
- TRACKS
- POWER UNIT & HYDRAULICS
- OPTIONS
- POWERSCREEN PULSE
- DIMENSIONS

DIMENSIONS

Figure 3: Powerscreen LL-75
Transport Position

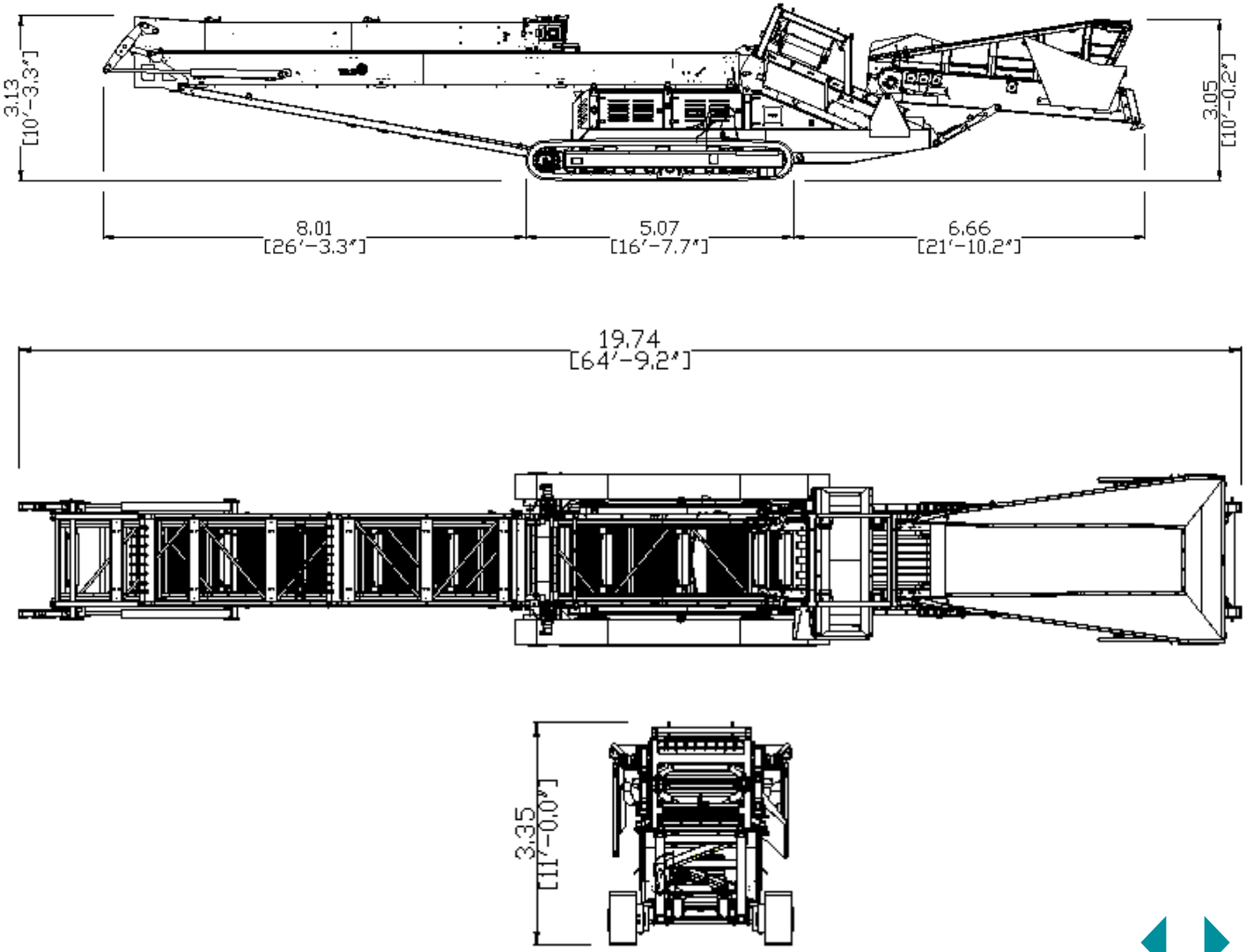

Powerscreen equipment complies with CE requirements.

Please consult Powerscreen if you have any other specific requirements in respect of guarding, noise or vibration levels, dust emissions, or any other factors relevant to health and safety measures or environmental protection needs. On receipt of specific requests, we will endeavour to ascertain the need for additional equipment and, if appropriate, quote extra to contract prices.

All reasonable steps have been taken to ensure the accuracy of this publication, however due to a policy of continual product development we reserve the right to change specifications without notice.

It is the importers' responsibility to check that all equipment supplied complies with local legislation regulatory requirements.

Plant performance figures given in this brochure are for illustration purposes only and will vary depending upon various factors, including feed material gradings and characteristics. Information relating to capacity or performance contained within this publication is not intended to be, nor will be, legally binding.

GET IN TOUCH

Dungannon
200 Coalisland Road, Dungannon,
Co Tyrone, BT71 4DR, Northern Ireland
Tel: +44 (0) 28 87 718 500
Fax: +44 (0) 28 87 747 231

Louisville
11001 Electron Drive,
Louisville, Kentucky, 40299 USA
Tel: +1 502 736 5200
Fax: +1 502 736 5202

www.powerscreen.com