Powerscreen® Trakpactor 260

Horizontal Impactor

SPECIFICATION - Rev 4 01-01-2017



POWERSCREEN®
A TEREX BRAND

Powerscreen® Trakpactor 260

Specification		Trakpactor 260 Standard
Total weight		27,000kg (59,525lbs) including side conveyor and magnet
Transport	**Length**	13.40m (43' 11")
	Width	2.5m (8' 2")
	Height	3.2m (10' 6")
Working	**Length**	13.4m (43'10")
	Width	4.0m (13'1")
	Height	3.6m (11' 10")

Crusher type:	Twin apron 4 bar impact crusher, feed opening 860mm x 610mm (34" x 24")
Power unit:	Tier IIIA Caterpillar C7.1 ACERT 186kW (250hp) or Tier 4 Final Caterpillar C7.1 205kW (280hp)
Paint colour:	Blue RAL 5021, Grey RAL 7024, Black RAL 9005

Features & Benefits

The Powerscreen® Trakpactor 260 Horizontal Shaft Impactor, is a highly compact tracked crusher designed to offer both excellent reduction & high consistency of product yield. The Powerscreen® Trakpactor 260 is designed mainly for the recycling & demolition markets & is an ideal contractor machine due to its compact design & mobility.

- Output potential 250 tph (275 US tph)
- Suitable for a variety of feed materials
- Ideal for recycling & demolition applications
- Replaceable tine bar cartridge style grizzly feeder
- Load management system to control feeder speed
- Proven Terex impact crusher with hydraulic overload protection, 4 bar rotor & twin aprons
- Crusher speed variation through user friendly PLC control system
- Fully independent under crusher vibrating pan feeder (Optional)
- Latest generation power unit that meets EU Stage IV / US Tier 4F emissions legislation
- HPTO clutch & highly fuel efficient direct drive system
- Modular conveyor with raise/lower facility to aid clearance of rebar
- Overband magnet (Optional)

Aggregate
- Blasted rock
- River rock

Recycling
- C & D waste
- Foundry waste

Mining
- Processed ores
- Processed minerals

All specifications subject to change without prior notice

Powerscreen® Trakpactor 260

Principal Components of the Powerscreen® Trakpactor 260 Impact Crusher

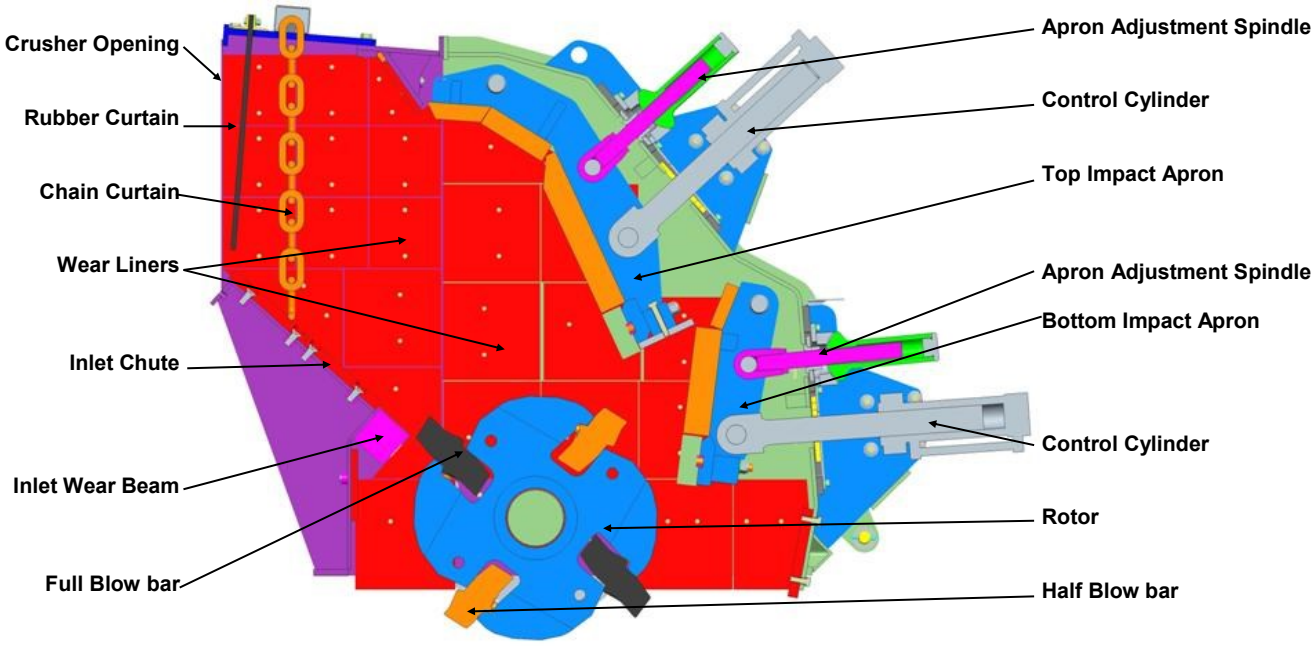

Principles of Operation

Material enters via the crusher opening & slides down the inlet chute where it is struck by the blow bar which is held within the rotor. This initial impact breaks the material which is then accelerated onto the top apron where more reduction takes place on impact. This material then falls back into the blow bars & the cycle repeated until the material is small enough to pass between the apron & the blow bar. Once through this gap, further reduction occurs on the bottom apron until the material can again pass through the gap & discharge from the underside of the crusher.

Any un-crushable material entering the chamber will relieve the overload cylinders & allow the material to pass. The cylinders will then return to the pre-set crushing position. The pre-set gap is adjusted by turning the adjustment spindle whilst the weight of the apron is held on the cylinder (hydraulic assist).

The hydraulic cylinders are pre-loaded to minimise apron bounce & wear on the cylinders. This arrangement also greatly reduces the oversize produced & is Patent Pending GB2455203

Crusher Specification

- **Feed opening:** 860mm x 610mm (34” x 24”)
- **Max lump size *:** 400mm^3 (16in^3) / 700mm (28”) diagonally / 750x450x200mm (30x18x8”) slab
  ** depending on material & blow bar spec*
- **Rotor width:** 860mm (34”)
- **Rotor diameter:** 860mm (34”)
- **Number of aprons:** 2
- **Maximum Clearance:** 170mm (6.7”) upper apron, 145mm (5.7”) lower apron
- **Maximum OSS setting:** 120mm (4.7”) upper apron, 55mm (2.2”) lower apron
- **Minimum CSS setting:** 40mm (1.5”) upper apron, 20mm (0.75”) lower apron
- **Number of blow bars:** 4
- **Blow bar removal:** Horizontally
- **Blow bar configuration:** 2 full & 2 half (Optional 4 full)
- **Setting adjustment:** Hydraulic assist
- **Overload protection:** Hydraulic
- **Rotor speeds:** 700 - 930rpm (32 - 40 m/s 105—131ft/s)
- **Applications:** Demolition/Recycling/Quarry
- **Crusher weight:** 6400kg (14,100 lbs)
- **Full blow bar weight:** 140kg (309 lbs)
- **Side liners:** 20mm (thick, abrasive resistant steel)

All specifications subject to change without prior notice

POWERSCREEN® A TEREX BRAND

Powerscreen® Trakpactor 260 - Impact Crusher

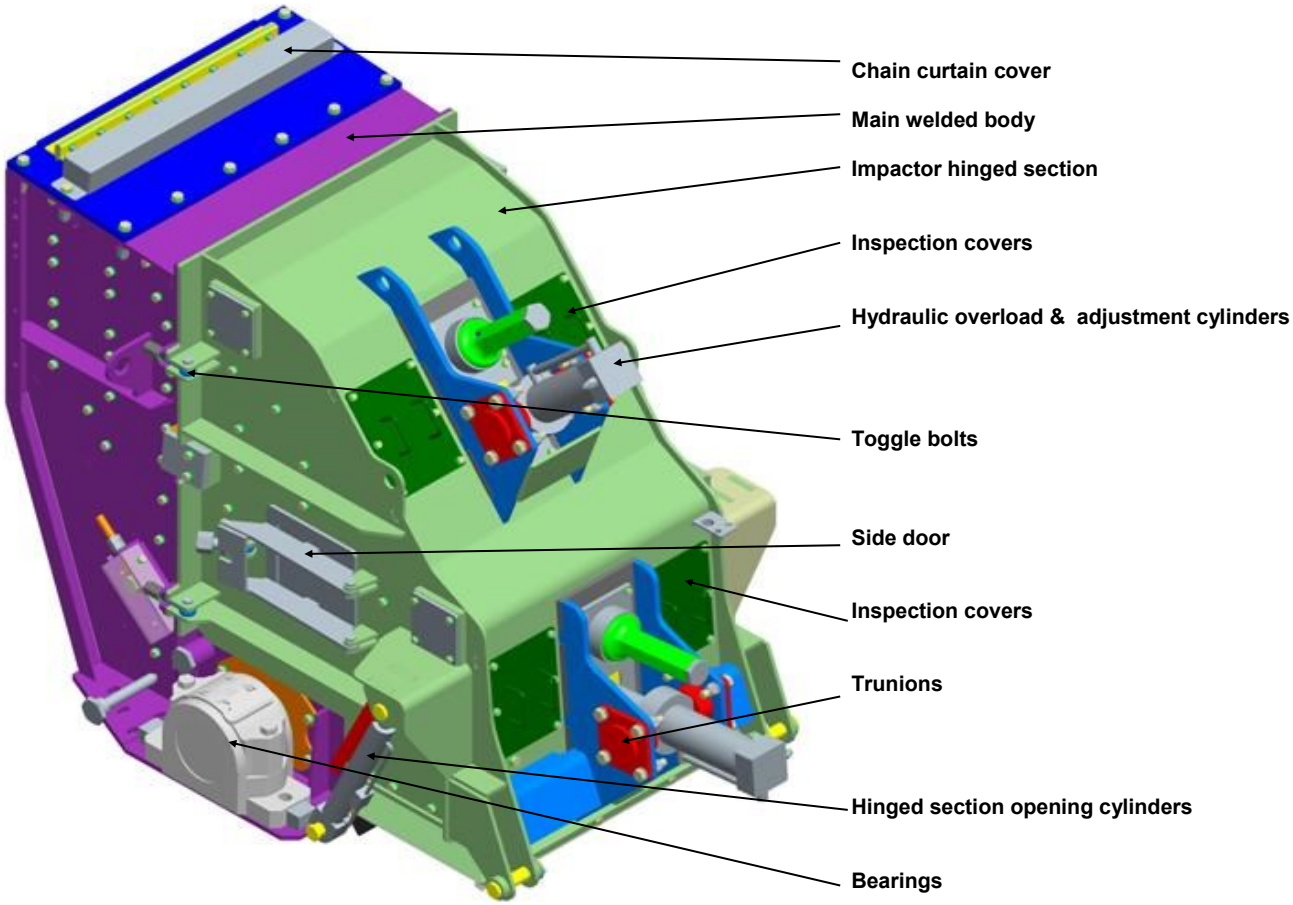

Main Features

Crusher body:	**Fabricated from steel plate & fully lined with replaceable abrasion resistant liner plates. Hinged side door allows access to apron tips & rotor for gap measurements & inspection. Complete hinged section opens hydraulically to allow blow bar removal & replacement, apron & liner replacement or major maintenance.**
Rotor:	**Cast steel fitted with 4 reversible & replaceable blow bars**
Bearings:	**Double row self aligning spherical roller bearing fitted each end of rotor**
Aprons:	**Cast steel aprons with replaceable abrasion resistant wear plate on tip of bottom apron**
Drive:	**Direct through wedge belts with tensioning system on the power unit**
Lubrication:	**Grease filled rotor bearings fitted with inner & outer labyrinth seals**
Blow bars:	**Standard blow bar is martensitic steel, options are available in high chrome & ceramic**

Applications

This plant is designed for both demolition & quarrying applications. When fitted with martensitic or ceramic blow bars the crusher will tolerate small quantities of steel reinforcing bar in the feed. However, the machine is not designed to accept large pieces of steel or other un-crushable objects, & the feed material should be assessed / inspected for suitability prior to crushing. It is vitally important that large pieces of steel or similar un-crushable objects are not allowed to enter the crushing chamber as severe damage & injury may occur.
When high chrome bars are fitted, *all* steel should be removed from the feed material & the machine should only be used on quarry applications, or clean materials such as asphalt.

Powerscreen® Trakpactor 260 Options

SPECIFICATION - Rev 4 01-01-2017

Hopper

Fixed, feed hopper with integral legs, mounted direct to chassis

Hopper width:	**2.26m (7' 5")**
Hopper capacity:	**Up to 2.3m^3 (3 cu. Yd.)**
Loading Height:	**3.2m (10'6")**
Hopper body:	**8mm thick abrasion resistant steel plate**

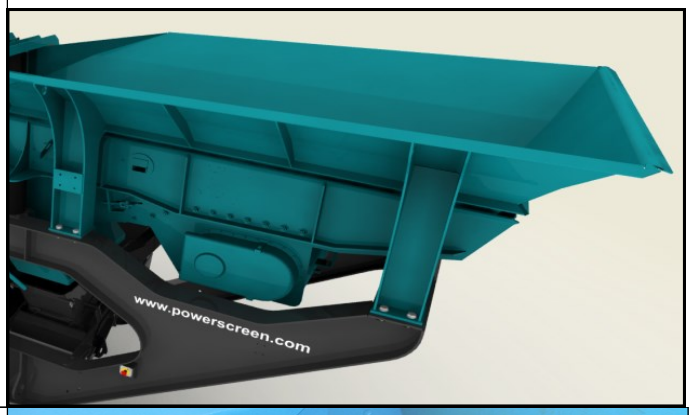

Grizzly Feeder

Vibrating grizzly feeder pan with integral two step tine bar grizzly section, extremely efficient & self cleaning

Type:	**Sprung vibrating pan**
Vibrating unit:	**Twin heavy duty cast eccentric shafts running in spherical roller bearings, gear coupled at drive end**
Length:	**3.27m (10' 9")**
Width:	**800mm (32")**
Pan:	**10mm thick fully welded base plate with 10mm thick abrasion resistant liners**
Drive:	**Flange mounted hydraulic motor**
Grizzly:	**Two stepped sections with 680mm (27") long tines spaced at 26mm (1") nominal spacing. Front sections with 36mm or 46mm apertures are optional, as are rubber mats to blank over the grizzly sections.**
Underscreen:	**Removable rubber blanking mat fitted as standard. Mesh screens optional.**
Control:	**Variable speed control though control panel & radio remote option if fitted**
Chute:	**The plant is fitted with a bypass chute. This has an internal two way flap door to control the direction of fines, either forward onto the product belt or onto the optional side conveyor.**



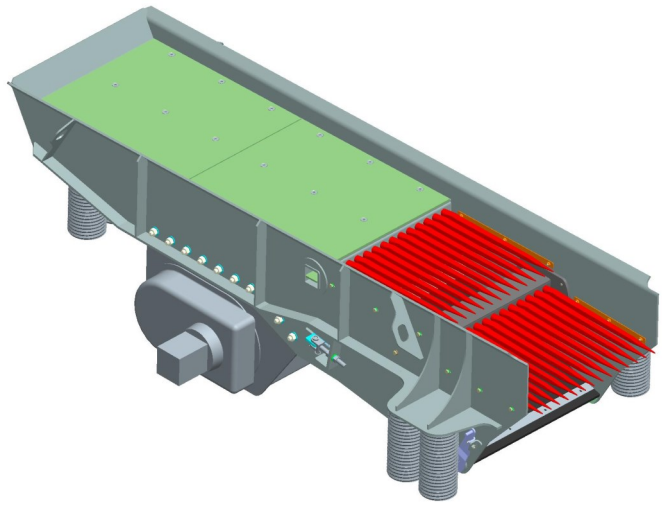

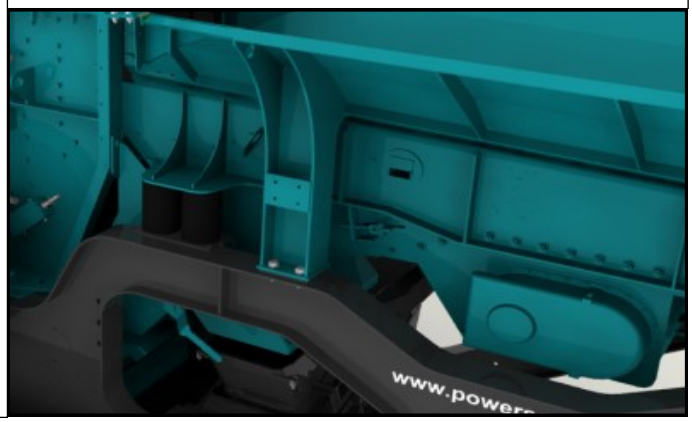

All specifications subject to change without prior notice

Powerscreen® Trakpactor 260 Options

SPECIFICATION - Rev 4 01-01-2017

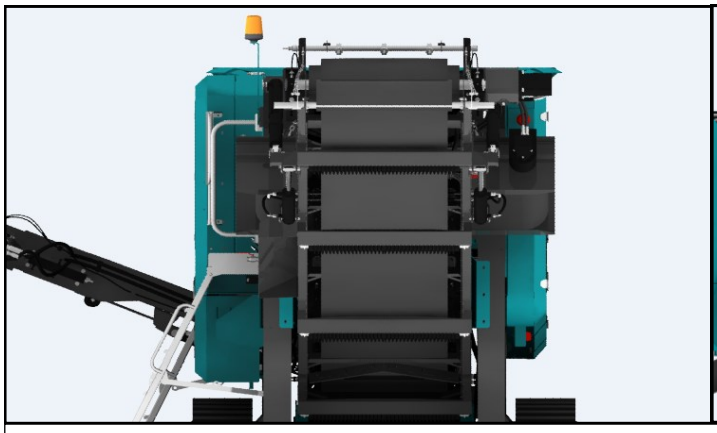

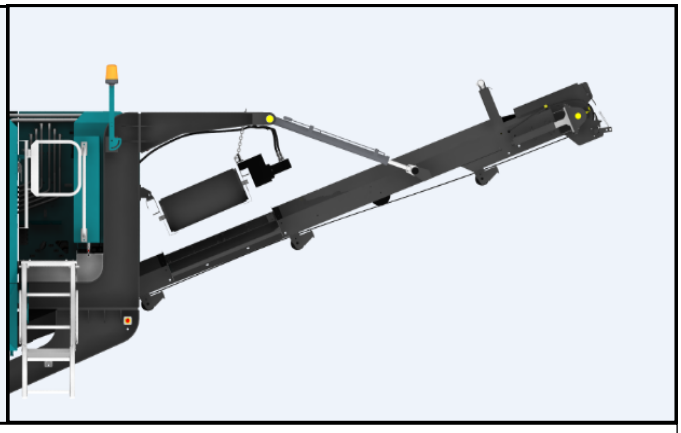

Full Length Product Conveyor

Conveyor type: Full length non-folding main conveyor with impact bars at feed point. Main Conveyor can be lowered hydraulically for maintenance.

Belt type:	EP500/3 with 8mm top & 2mm bottom heavy duty rubber covers, vulcanised
Belt width:	900mm (36”)
Discharge height:	3.25m (10’ 8”) in fully raised position
Stockpile volume:	51m^3 (66.7 cu. yd.)
Feedboot:	Fabricated steel with abrasion resistant steel liners
Impact area:	Impact bars at feed point
Drive:	Hydraulic motor direct to head drum
Dust Suppression:	Fitted with hose and spraybars as standard (no pump supplied)
Option:	Full length Product conveyor with folding head section for transport

Dust Suppression System

Spray bars with atomiser nozzles mounted over the product conveyor feed & discharge points, piped to an inlet manifold for customer water supply.

Type:	Clean water multi atomising nozzles
Inlet:	Single point
Inlet pressure:	3bar (44 psi)
Water supply:	24 L/min (6.34 G/min)
Frost protection:	Via system main valves

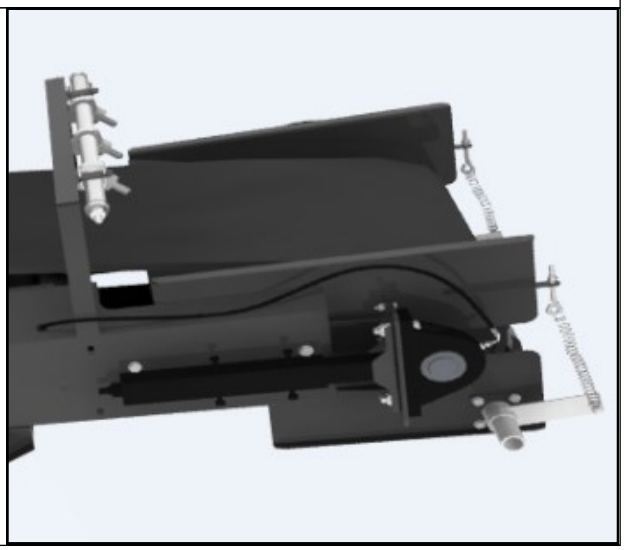

Powerscreen® Trakpactor 260 Options

SPECIFICATION - Rev 4 01-01-2017

Power unit

Engine: Tier IIIA: Caterpillar C7.1 186kW (250hp)

Operating rpm range: 1700—2100rpm

Engine: Tier 4F: Caterpillar C7.1 205kW (280hp)

Operating rpm range: 1700-2100rpm

Operating conditions: Ambient temperature +30°C & –5°C (86F & 23F) at altitudes up to 1000m (3281ft) above sea level #

Reductant tank size: 60 L (16 US G)

Plant drive: High quality tandem pumps Driven via engine PTO's

Fuel tank capacity: 400 L (105 US G)

Hydraulic tank capacity: 350 L (92 US G)

Clutch type: Highly efficient, self-adjusting HPTO 12 dry plate clutch with electro hydraulic operation

Crusher drive: Direct drive via wedge belts,
Tier 3 Clutch pulley diameter 335mm (13.2")
Tier 4F Clutch pulley diameter 375mm (14.8")
Crusher pulley diameter 800mm (2' 7")

Crushing performance can be tuned, by chang ing engine speed on the PLC without signifi- cant loss of engine performance.

Drive tensioning: Manual tensioner pulley





 # For applications outside this range please consult with Powerscreen as the plant performance / reliability may be affected.

.

Powerscreen® Trakpactor 260 Options

SPECIFICATION - Rev 4 01-01-2017

Crawler Tracks

Type:	**Heavy duty, 2 speed, bolt on**
Track centres:	**2920mm (9' 7")**
Track width :	**400mm (15.7")**
Climbing grade:	**25º maximum**
Drive :	**Two integral hydraulic motors**
Tensioning:	**Hydraulic adjuster, grease tension**



Guarding

Wire mesh or sheet metal guards are provided for all drives, flywheels, pulleys & couplings

The guards provided are designed & manufactured to CE & ANSI standards

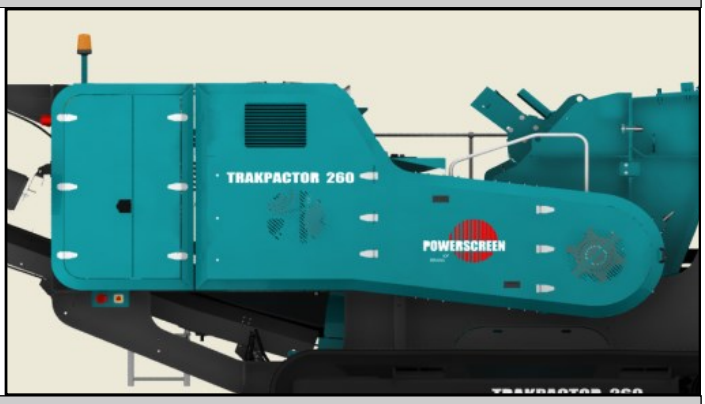

Platforms

Platforms are provided for maintenance on one side of the feeder & Impactor. These are fitted with double row handrails & access ladders.

Platforms are also provided to gain access to the drive side of the crusher & the power unit





Powerscreen® Trakpactor 260 Options

SPECIFICATION - Rev 4 01-01-2017

Plant Controls

Full PLC control panel

Full system diagnostics

Controls fitted to the plant include:

Sequential start up

- **Engine (start/stop/speed)**
- **Crusher (start/stop)**
- **Optional dirt conveyor (start/stop)**
- **Product conveyor (start/stop & raise/lower)**
- **Feeder (start/stop/speed) controls, located on the side of the plant**



Umbilical Controls

An umbilical control unit is supplied with the plant

This is used to control the tracking function & is also fitted with a stop button for the plant

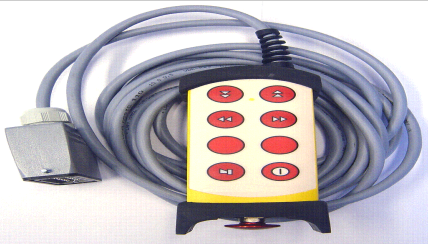

Chassis

Heavy Duty I-Section of welded construction provides maximum strength & accessibility



Optional Extras

- **High chrome blow bars**
- **Ceramic blow bars**
- **4 full size hammers in lieu of 2 full & 2 half hammers**
- **Blow Bar Extractor Kit**
- **Overband magnetic separator**
- **Twin pole overband magnetic separator**
- **Dirt conveyor**
- **Plant lighting**
- **Feeder under screen mesh**
- **Belt weigh**
- **Radio remote control**
- **Underpan Feeder**
- **Folding Product Conveyor**
- **Powerscreen Pulse**

Note: **Dirt conveyor or grizzly blanking mats may have to be used in the event of difficult or sticky feed material**

All specifications subject to change without prior notice

Powerscreen® Trakpactor 260 Options

SPECIFICATION - Rev 4 01-01-2017

Side Conveyor

Conveyor type:	Steel, troughed tray hydraulically folding
Width:	500mm (20”)
Discharge height:	2.03m (6’ 8”)
Stockpile volume:	13.8m^3 (18 cu. yd.)
Drive:	Direct drive hydraulic motor
Lubrication:	Grease points on bearings
Position:	Discharge either side



Magnet

Magnet type:	Suspended self cleaning over band with endless belt
Belt Width: :	750mm (30”)
Drive:	Direct drive hydraulic motor
Control:	Pre-set variable speed
Discharge:	Via stainless shedder plate
Twin pole:	Also available

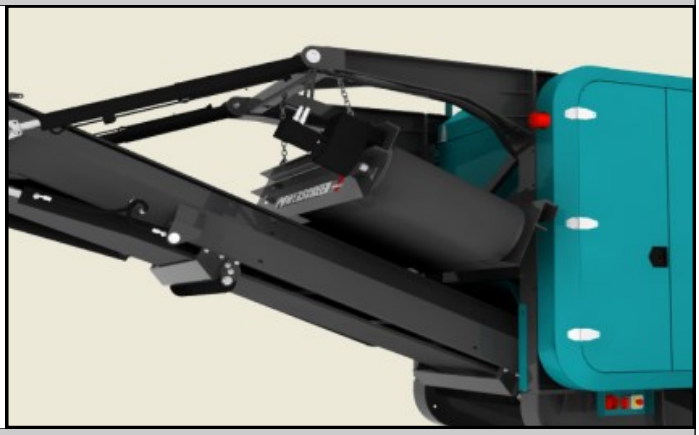

Feeder Underscreen Mesh

Position:	Removable wire meshes fitted in lieu of standard rubber blanking mat when used in conjunction with optional side conveyor
Sizes:	10,20,30,40,50mm



Blow Bars

2 full size Martensitic & 2 half size Manganese blow bars fitted as standard. 2 further options available:

High chrome:	Suitable for medium to hard rock applications where there is no steel present in feed material. Good wear characteristics
Ceramic:	Suitable for applications with limited steel in feed. Improved wear characteristics over standard martensitic blow bars
4 full blow bars:	Available in all options



Powerscreen® Trakpactor 260 Options

SPECIFICATION - Rev 4 01-01-2017

Blow Bar Extractor Kit

- This is the complete kit (including single acting hydraulic cylinder).
- This is a standalone tool, that can be used to help push the worn blow bars out of the CR004 rotor.

Note: This is a highly recommended piece of kit , especially when working in 'sticky Asphalt type Applications'.

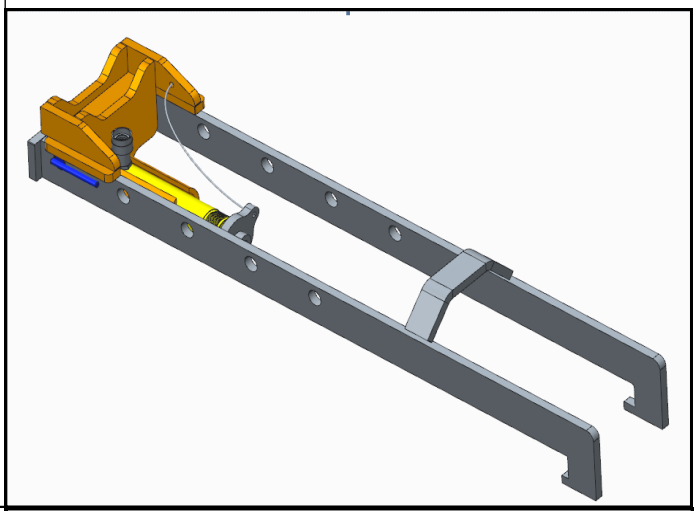

Vibrating Pan Feeder

Type:	Steel bodied vibrating feeder fitted with abrasion resistant liners, mounted under crusher & designed to prevent any impact damage to product conveyor
Width:	600mm (24")
Length:	2.0m (6' 6")
Drive:	Hydraulic out of balance exciter

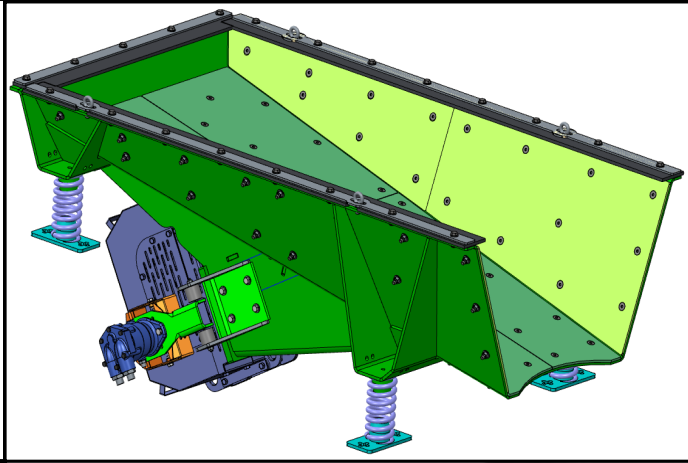

Hot/Cold Climate Oils

Cold climate oils - (Recommended for ambient temperatures between -20 to +30oC

Hot climate oils - (Recommended for ambient temperatures between +15 to +50oC



Control Panel Positive Pressurisation

An additional unit designed to reduce dust particles within the Control Panel.

A continuous flow of clean air is passed through the cabinet whilst the unit simultaneously filters out any particulate laden air.

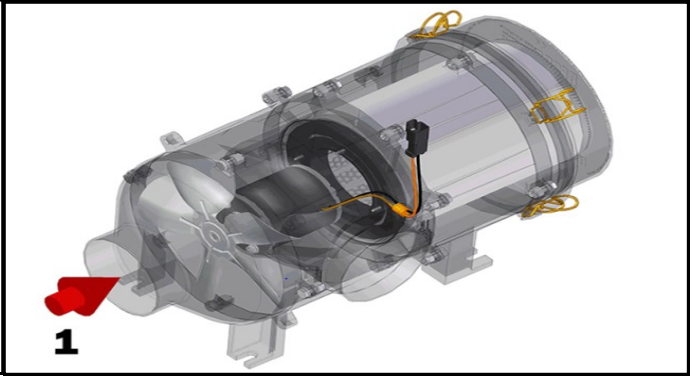

Powerscreen® Trakpactor 260 Options

SPECIFICATION - Rev 4 01-01-2017

Belt Weigh

Belt weigher system can be fitted to the product conveyor.

Display: Separate read out near control panel



Radio Remote Control

Complete with integrated tracking functions & plant stop function NB—only available in certain countries where type approval has been obtained

Remote can also be used to:

- **Start/stop feeder**
- **Control feeder speed**
- **Raise/lower product conveyor**
- **Open top apron**



Plant Lighting

Lights mounted over the crusher & on the cowls at the front of the plant. These are directional & are controlled from within the control panel.

Folding Product Conveyor

Full length Product Conveyor with fully folding head section for transport.

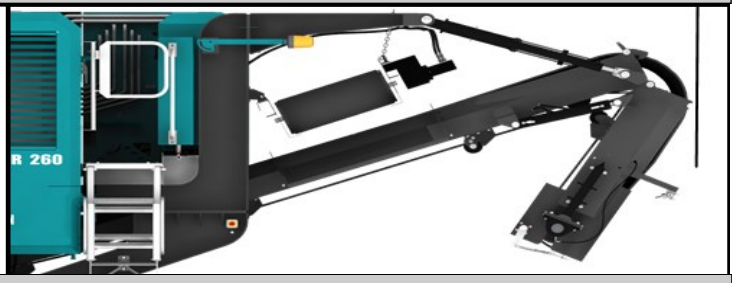

Powerscreen Pulse

Powerscreen Pulse is a system which allows the machine to relay performance and production data via phone networks, or by satellite when there's no cellular signal, to any device with a web browser, such as a PC, tablet or Smartphone.

POWERSCREEN® PULSE

Powerscreen® Trakpactor 260 Options

SPECIFICATION - Rev 4 01-01-2017

Approximate Plant Weights & Dimensions

Transport length:	**13.40m (43’ 11”)**
Transport width:	**2.5m (8’ 2”)**
Transport height:	**3.2m (10’ 6”)**
Working length:	**13.40m (43’ 11”)**
Working width:	**4.0m (13’1”)**
Working height:	**3.6m (11’ 10”)**
Total plant weight:	**27,000kg (59,525lbs) including dirt conveyor and magnet**

Trakpactor 260 with Dirt Conveyor & Magnet

Transport Dimensions

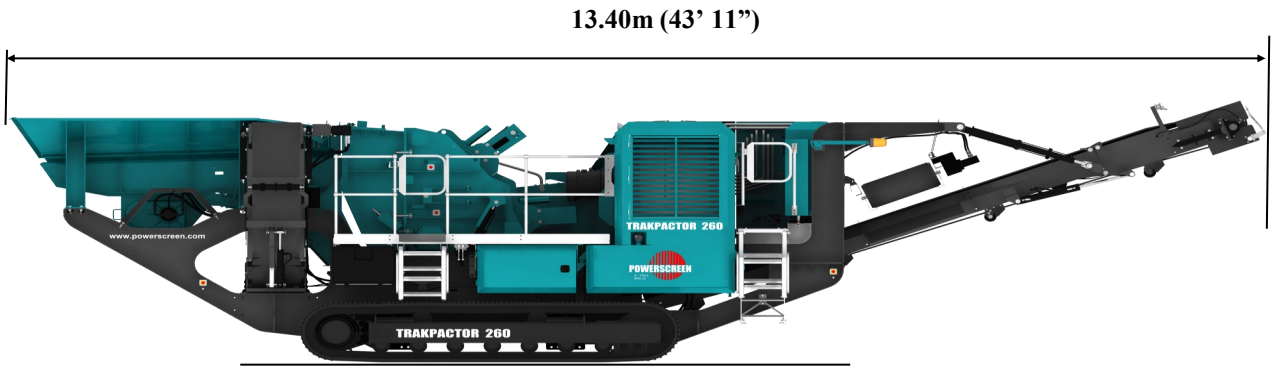

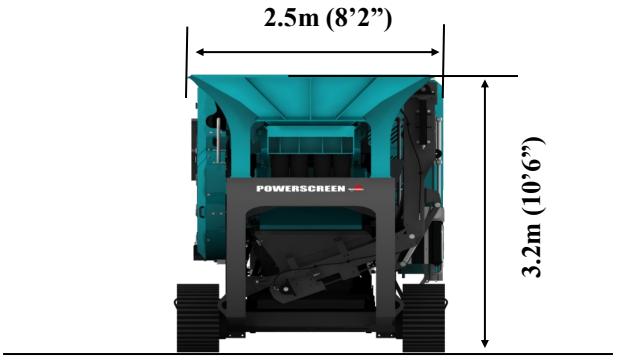

Powerscreen® Trakpactor 260 Options

SPECIFICATION - Rev 4 01-01-2017

Approximate Plant Weights & Dimensions

Transport length:	**13.40m (43’ 11”)**
Transport width:	**2.5m (8’ 2”)**
Transport height:	**3.2m (10’ 6”)**
Working length:	**13.40m (43’ 11”)**
Working width:	**4.0m (13’1”)**
Working height:	**3.6m (11’ 10”)**
Total plant weight:	**27,000kg (59,525lbs) including dirt conveyor and magnet**

Trakpactor 260 with Dirt Conveyor & Magnet

Working Dimensions

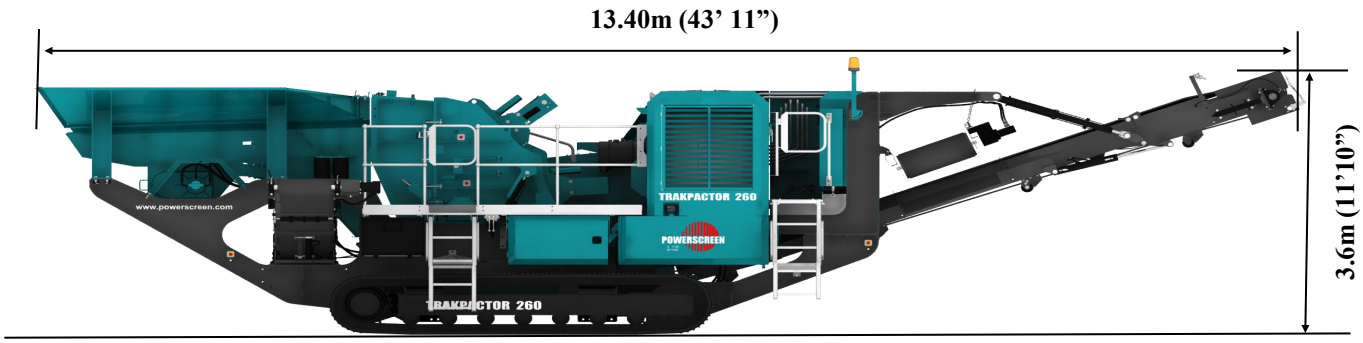

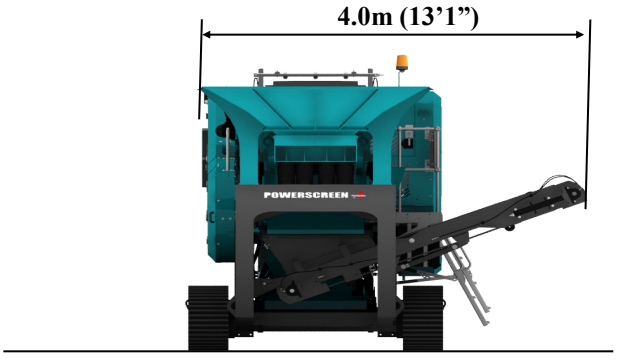

Powerscreen® Trakpactor 260 Options

SPECIFICATION - Rev 4 01-01-2017

Powerscreen equipment complies with CE requirements.

Please consult Powerscreen if you have any other specific requirements in respect of guarding, noise or vibration levels, dust emissions, or any other factors relevant to health and safety measures or environmental protection needs. On receipt of specific requests, we will endeavour to ascertain the need for additional equipment and, if appropriate, quote extra to contract prices.

All reasonable steps have been taken to ensure the accuracy of this publication, however due to a policy of continual product development we reserve the right to change specifications without notice.

It is the importers' responsibility to check that all equipment supplied complies with local legislation regulatory requirements.

Plant performance figures given in this brochure are for illustration purposes only and will vary depending upon various factors, including feed material gradings and characteristics. Information relating to capacity or performance contained within this publication is not intended to be, nor will be, legally binding.

Terex GB Ltd.
200 Coalisland Road
Dungannon
Co. Tyrone
Northern Ireland
BT71 4DR

Tel: +44(0) 28 8774 0701
Fax: +44(0) 28 8774 6569

E-Mail: sales@powerscreen.com
Web: www.powerscreen.com

Terex is a registered trademark of Terex Corporation in the United States of America and many other countries.
Powerscreen is a registered trademark of Terex GB Ltd in the United States of America and many other countries.

Copyright Terex Corporation 2017