Powerscreen® Trakpactor 550

Horizontal Impactor

SPECIFICATION - Rev 0. 05-04-2017



POWERSCREEN®
A TEREX BRAND

Powerscreen® Trakpactor 550

SPECIFICATION - Rev 0. 05-04-2017

Specification		Trakpactor 550 Standard
Total weight		54,850kg (115,919lbs) including bypass conveyor & magnet
Transport	Length	17.41m (57' 1") VGF & Standard Product Conveyor
	Width	3m (9' 10")
	Height	3.8m (12' 6")
Working	Length	17.13m (56'2") VGF & Standard Product Conveyor
	Width	3m (9' 10") / 6.96m (22' 10") w/ bypass conveyor deployed
	Height	4.16m (13' 8")
Crusher type:		Twin apron 4 bar impact crusher, feed opening 1370mm x 911mm (54" x 36")
Power unit:		Tier 3—Caterpillar C13 328kW (440hp) or Tier 4F Scania DC13 368kW (500hp) or Constant Speed Scania DC13 371kW (498hp)
Paint colour:		Blue RAL 5021, Grey RAL 7024, Black RAL 9005

Features & Benefits

The Powerscreen® Trakpactor 550 horizontal shaft impactor is designed for processing soft to medium-hard primary & secondary materials such as natural rock & construction derived materials like asphalt, recycling & demolition waste.

Material is fed into the large feed hopper, common on both vibrating grizzly feeder & live pre-screen versions, both feature a selectable crusher bypass facility & optional fines discharge conveyor. Load sensing, ensures the wide crusher inlet opening receives a continuous feed of pre-screened material, avoiding unnecessary crusher wear.

The Powerscreen® Trakpactor 550's robust impact chamber features a twin apron, 4 bar rotor design, with hydraulic release aprons, hydraulic setting adjustment, hydraulic crusher overload & is driven directly off the engine via clutch for optimum fuel economy. Next crushed material passes; either over the independent under pan feeder & modular product conveyor, or directly onto the full length conveyor, both conveyors feature a raise/lower facility to aid clearance of rebar in the event of a blockage.

The plant has been designed with ease of maintenance in mind, hydraulic banks, battery access and control valves are at eye level to make setup and operation much easier.

- Output potential up to 500 tph (550 US tph)
- Suitable for a variety of feed materials, ideal for recycling, demolition & quarry applications
- Double deck grizzly feeder with under screen
- Load management system to control feeder speed
- Proven impact crusher with hydraulic overload protection, 4 bar rotor & twin apron design
- Hydraulic Inlet Lid allows 'near-size' pieces to enter chamber without blocking inlet.
- Hydraulic Autoset CSS Adjustment (Optional)
- Heavy duty under crusher impact bars as standard
- Fully independent under crusher vibrating pan feeder (Optional)
- Modular conveyor with raise/lower facility to aid clearance of rebar
- Bypass Conveyor selection on either side of plant. RHS or LHS.
- Latest generation power units that meet EU Stage IIIA / US Tier 3 & EU Stage IV / US Tier 4F regulations
- Chamber drive via clutch & highly fuel efficient direct drive system
- Crusher speed variation through user friendly PLC control system
- Live pre-screen (Optional)

Applications

Aggregate
- Blasted rock
- River rock

Recycling
- C & D waste
- Foundry waste

Mining
- Processed ores
- Processed minerals

All specifications subject to change without prior notice

Powerscreen® Trakpactor 550

Principal Components of the Powerscreen® Trakpactor 550 Impact Crusher

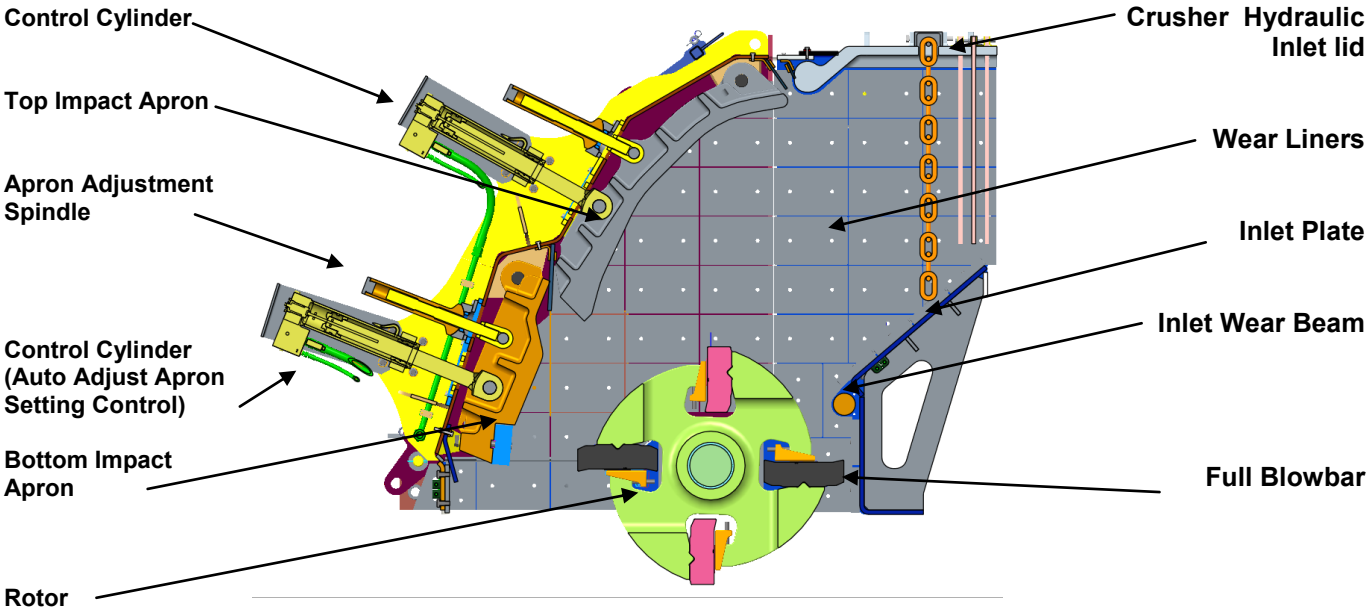

Principles of Operation

Material enters via the crusher opening & slides down the inlet chute where it is struck by the blow bar which is held within the rotor. This initial impact breaks the material which is then accelerated onto the top apron where more reduction takes place on impact. This material then falls back into the blow bars & the cycle repeated until the material is small enough to pass between the apron & the blow bar. Once through this gap, further reduction occurs on the bottom apron until the material can again pass through the gap & discharge from the underside of the crusher.

Any un-crushable material entering the chamber will relieve the overload cylinders & allow the material to pass. The cylinders will then return to the pre-set crushing position. The pre-set gap is adjusted by turning the adjustment spindle whilst the weight of the apron is held on the cylinder (hydraulic assist).

Crusher Specification

- **Feed opening:** 1370mm x 911mm (54” x 36”)
- **Max lump size*** 500mm^3 (20in^3) / 860mm (34”) diagonally / 1000x1000x200mm (39x39x8”) slab (Blasted Rock (Limestone Type): 600x600x600mm) * depending on material & blow bar spec
- **Rotor width:** 1330mm (52”)
- **Rotor diameter:** 1210mm (47”)
- **Number of aprons:** 2
- **Maximum clearance:** Top Apron: 265mm (10.5”) Bottom Apron: 305mm (12”)
- **Maximum OSS setting:** 200mm (8”) upper apron, (200)mm (4 (7.8)”) lower apron
- **Minimum CSS setting:** 75 (35)mm (3 (1.4)”) upper apron, 35 (20)mm (1.4 (0.8)”) lower apron)
- **Number of blow bars:** 4
- **Blow bar removal:** Vertically
- **Blow bar configuration:** 2 full & 2 half (optional 4 full)
- **Setting adjustment:** Hydraulic assist
- **Overload protection:** Hydraulic
- **Rotor speeds:** 537 - 694rpm (34 - 44m/s) (111 - 144ft/s)
- **Applications:** Demolition / recycling / quarry
- **Crusher weight:** 14,540kg (32,055lbs)
- **Full blow bar weight:** 410kg (904lbs)
- **Side Liners:** 20mm thick, abrasive resistant steel

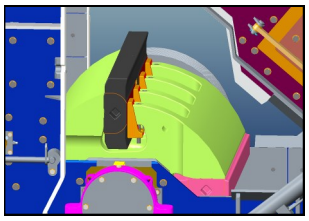

Views from inside the Trakpactor 550 Impact Crusher, showing blow bars, wedges & rotor

All specifications subject to change without prior notice

POWERSCREEN® A TEREX BRAND

Powerscreen® Trakpactor 550

Powerscreen® Trakpactor 550 - Impact Crusher

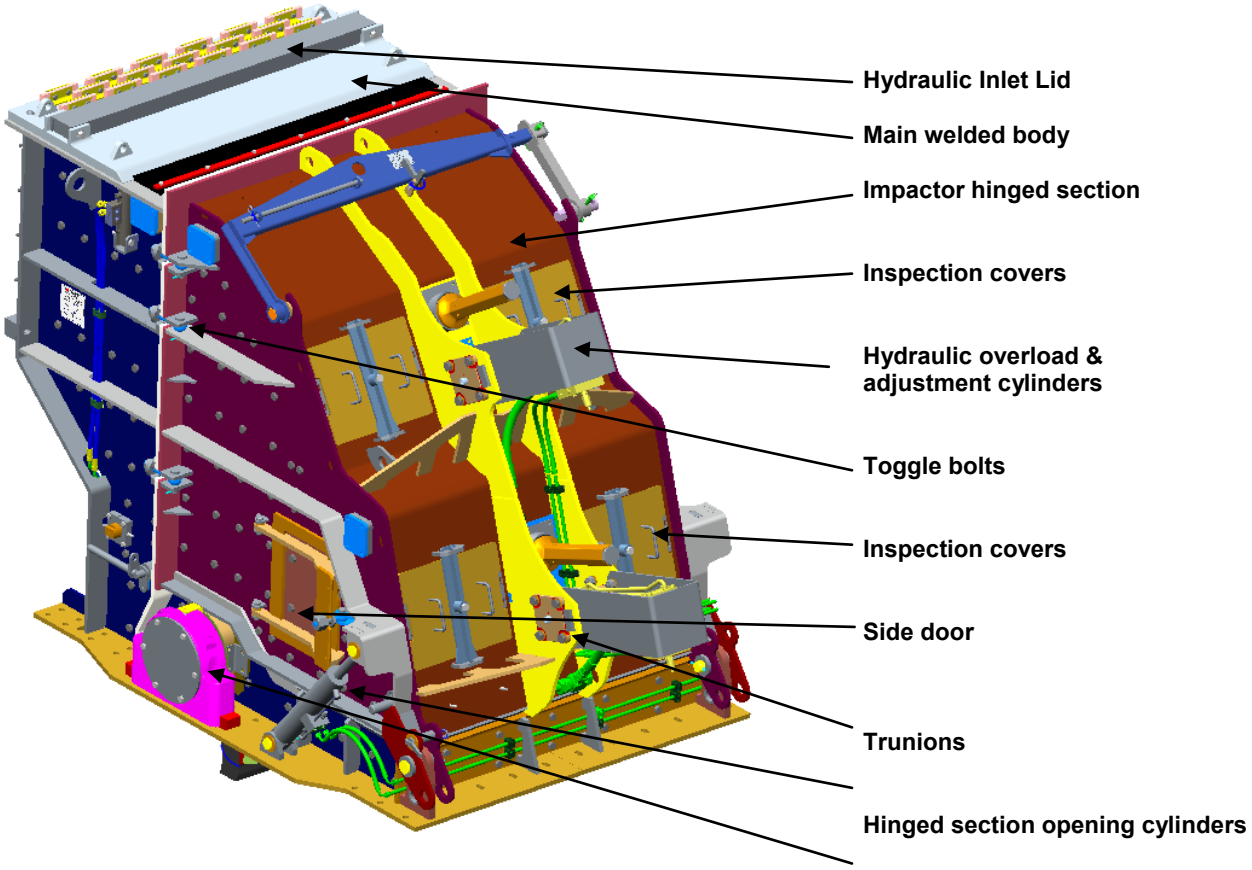

Picture shows typical components of an Impact Crusher

Main Features

Crusher body:	Fabricated from steel plate & fully lined with replaceable abrasion resistant liner plates. Hinged side door allows access to apron tips & rotor for gap measurements & inspection. Complete hinged section opens hydraulically to allow blow bar removal & replacement, apron & liner replacement or major maintenance
Rotor:	Cast steel & fitted with 4 reversible & replaceable blow bars
Bearings:	Double row self aligning spherical roller bearing fitted each end of rotor
Aprons:	Cast steel aprons with replaceable abrasion resistant wear plate on tip of bottom apron
Drive:	Direct through wedge belts with tensioning system on the power unit
Lubrication:	Rotor bearings are greased & fitted with inner & outer labyrinth seals
Blow bars:	Standard blow bar is martensitic steel, options available in high chrome & ceramic

This plant is designed for both demolition & quarrying applications. When fitted with martensitic or ceramic blow bars the crusher will tolerate small quantities of steel reinforcing bar in the feed. However, the machine is not designed to accept large pieces (maximum 20mm diameter, 500mm long) of steel or other uncrushable objects, & the feed material should be assessed / inspected for suitability prior to crushing. It is vitally important that large pieces of steel or similar un-crushable objects are not allowed to enter the crushing chamber as severe damage & injury may occur.
When high chrome bars are fitted, *all* steel should be removed from the feed material & the machine should only be used on quarry applications, or clean materials such as asphalt.

All specifications subject to change without prior notice

Powerscreen® Trakpactor 550

SPECIFICATION - Rev 0. 05-04-2017

Hopper

Hydraulic folding hopper with over centre struts & wedge-lock system

Hopper length:	**4.87m (15' 12")**
Hopper width:	**2.62m (8' 7")**
Hopper capacity:	**7m^3 (9.2 cu. yd.)**
Body:	**12mm thick abrasion resistant steel plate**

Hydraulic locking as standard.

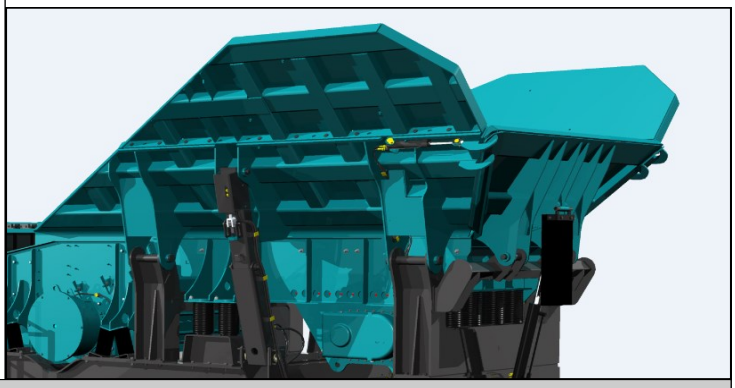

Vibrating Grizzly Feeder

Type:	**Spring mounted vibrating**
Vibrating unit:	**Twin heavy-duty cast eccentric shafts running in spherical roller bearings. Gears coupled at drive end.**
Length:	**4.3m (14' 1")**
Width:	**1.26m (4' 2")**
Pan:	**12mm (0.5") thick abrasion resistant steel base plate liners**
Drive:	**Flange mounted hydraulic motor**
Grizzly:	**2m (6'6") long double section of welded tapered finger bars at 34mm (1.33") as standard or 38mm (1.5"), 50mm (2"), 60mm (2.4"), 63mm (2.5") & 75mm (3") optional nominal spacing fabricated in 20mm thick abrasion resistant steel.**
Mesh:	**Blanking mat standard, under screen mesh in sizes 25mm, (1") as standard.**
Chute:	**Plant is fitted with a bypass chute, with an internal two way flap door to control direction of fines, either forward onto the product belt or down onto the optional bypass conveyor, (if blanking mat is fitted)**

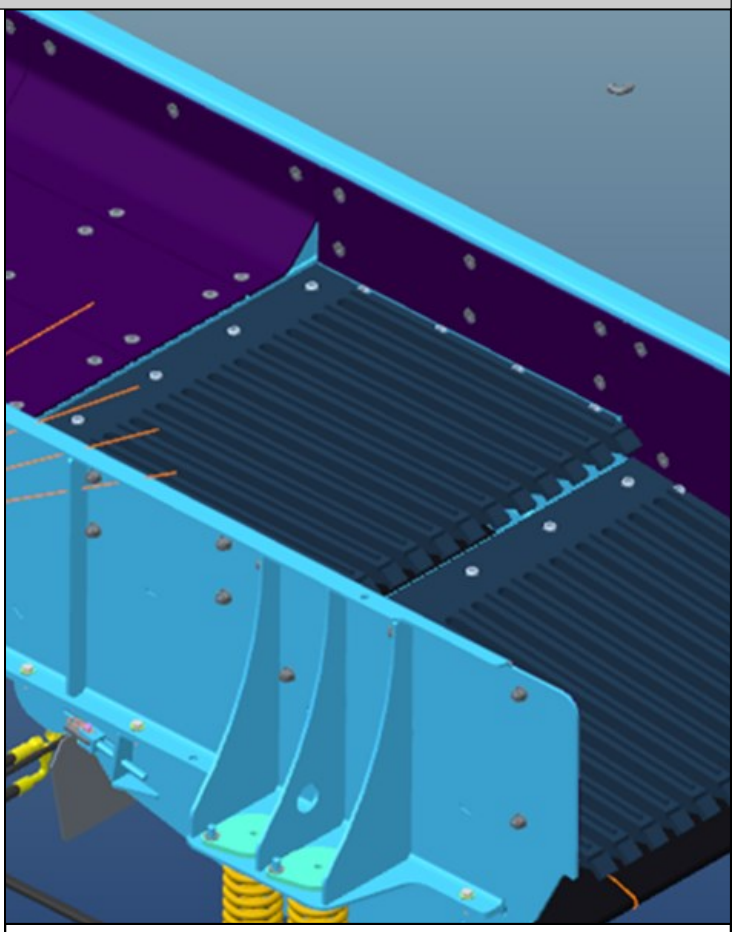

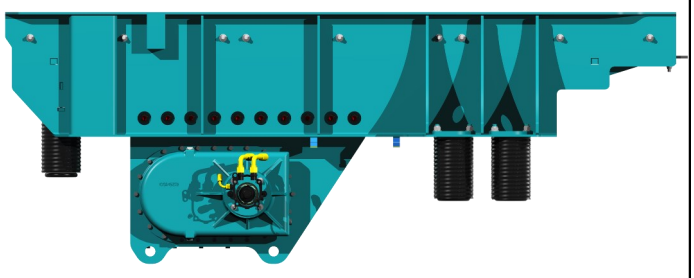

All specifications subject to change without prior notice

POWERSCREEN® A TEREX BRAND

Powerscreen® Trakpactor 550

SPECIFICATION - Rev 0. 05-04-2017

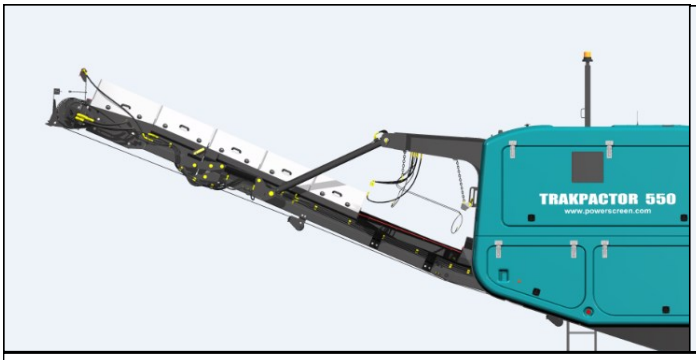

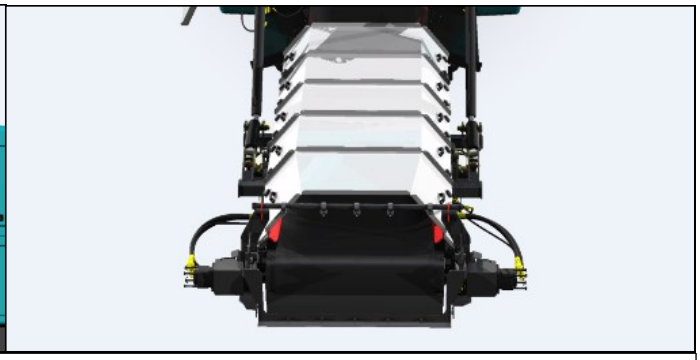

Product Conveyor

Conveyor type:	**Fully removable modular unit with hydraulic raise & lower facility to increase clearance & simplify rebar removal. Shallow troughed with winged rollers & fully tunnelled with minimal snag areas**
Belt type:	**TOUGHFLEX SW630/2 9+3 GRADE X COVERS & vulcanised joint**
Belt width:	**1200mm (47")**
Discharge height:	**3.8m (12' 6") when fully raised**
Stockpile volume:	**81.2m^3**
Feedboot:	**Fabricated steel with abrasion resistant steel liners**
Impact area:	**Heavy Duty Under crusher impact bars**
Skirting:	**Fully skirted in wear resistant rubber up to magnet discharge area**
Drive:	**Dual hydraulic motor direct to head drum**
Lubrication:	**Centralised grease points for lubrication of shaft bearings**
Belt covers:	**Optional Aluminium removable dust covers**

Dust Suppression System

Spray bars with atomiser nozzles mounted over product conveyor & final conveyor discharge, piped to an inlet manifold for customer water supply or optional pump

Type:	**Clean water multi atomising nozzles**
Inlet:	**Single point**
Inlet pressure:	**3 BAR (44 psi)**
Water supply:	**24 litres (6.3 g) per minute min**
Frost protection:	**Via system main valves**
Pump:	**Optional**



Powerscreen® Trakpactor 550

SPECIFICATION - Rev 0. 05-04-2017

Power unit

Tier 3 / Stage 3A:	Caterpillar C-13 ACERT, 6 cylinder, 328 kW (440hp)
Operating conditions:	Ambient temp. +30°C & –5°C (86ºF & 23ºF) altitudes up to 1000m (3281ft) above sea level.
Operating rpm range:	1700 - 2100rpm
Emission control technique:	Not Applicable
Typical fuel consumption:	50-65 L/hr (13-17 US Gal/hr)
Plant drive:	High quality pumps driven via clutch PTO's
Clutch type:	DESCH REVOX 14" WET CLUTCH

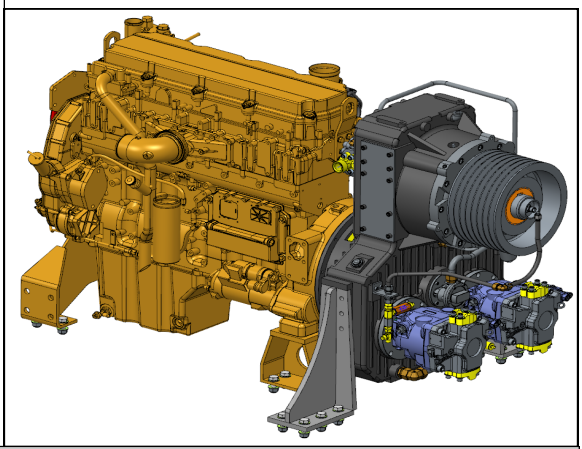

Tier 4F /Stage IV:	Scania DC13 385A - 368kW (500hp)
Operating conditions:	Ambient temp. +30°C & –5°C (86ºF & 23ºF) altitudes up to 1000m (3281ft) above sea level.
Operating rpm range:	1500 - 1900rpm
Typical fuel consumption:	N/A
Emission control technique:	Selective Catalytic Reduction (SCR)
Reductant tank size:	60 L (16.8 US Gal)
Plant drive:	High quality pumps driven via clutch PTO's
Clutch type:	DESCH REVOX 14" WET CLUTCH

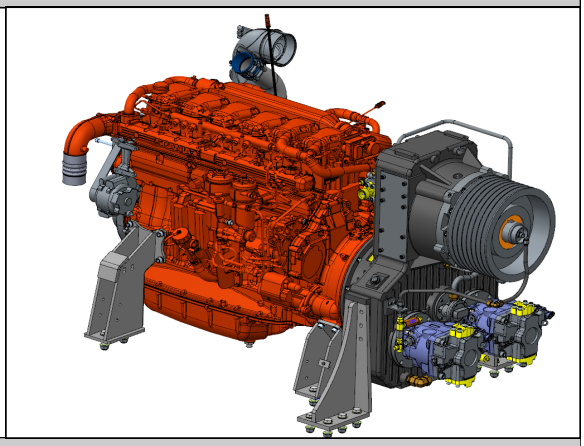

Constant Speed: (EU Only)	Scania DC13 371kW (498hp)
Operating conditions:	Ambient temp. +30°C & –5°C (86ºF & 23ºF) altitudes up to 1000m (3281ft) above sea level.
Operating rpm range:	1500 - 1900rpm
Emission control technique:	Not Applicable
Reductant tank size:	60 L (16.8 US Gal)
Plant drive:	High quality pumps driven via clutch PTO's
Clutch type:	DESCH REVOX 14" WET CLUTCH

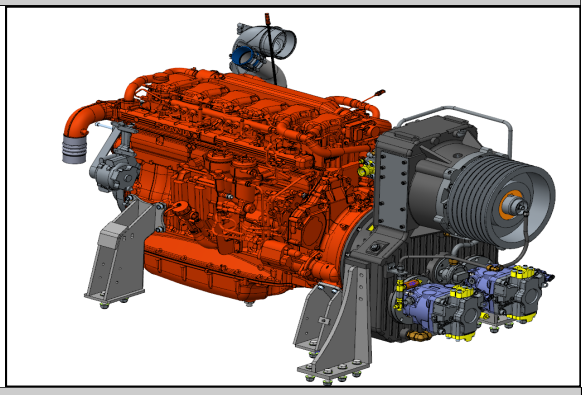

Fuel tank capacity:	1000L (264 US Gal)
Hydraulic tank capacity:	700 L (185 US Gal)
Crusher drive:	Direct drive via wedge belts, Clutch pulley diameter 425mm T4, 375mm T3 Crusher pulley diameter 800mm Terex (39"). 800mm WITH HAZEMAG Crushing performance can be tuned, by changing engine speed via the PLC .
Crusher drive tensioning:	VEE BELT TENSIONER SYSTEM



All specifications subject to change without prior notice

POWERSCREEN® A TEREX BRAND

Powerscreen® Trakpactor 550

SPECIFICATION - Rev 0. 05-04-2017

Crawler Tracks

Type:	**Heavy duty tracks, bolted to chassis on pads & pins**
Track centres:	**3.78m (12' 5")**
Track width:	**500mm (20")**
Climbing grade:	**30° maximum**
High speed: **Low speed:**	**0.9kph (0.56 mph)** **0.3kph (0.2 mph)**
Drive:	**Two integral hydraulic motors**
Tensioning:	**Hydraulic adjuster, grease tension**



Guarding

Wire mesh or sheet metal guards are provided for all drives, flywheels, pulleys & couplings

The guards provided are designed & manufactured to CE & ANSI standards

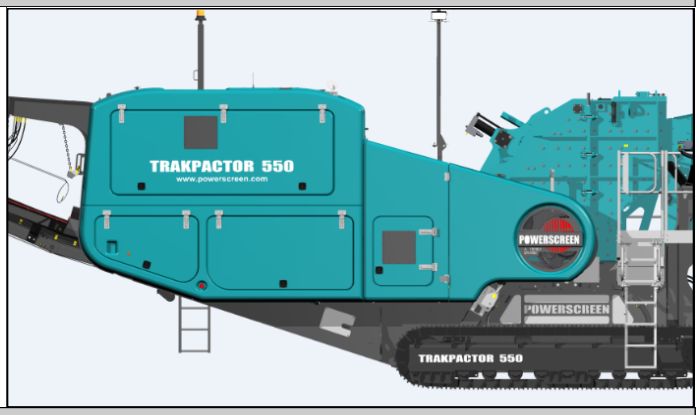

Platforms

Platforms are provided for maintenance on BOTH sides of the feeder & Impactor, these are fitted with double row handrails & access ladders

Platforms are also provided to gain access to the rear of the crusher on the Pre-Screen model & power unit

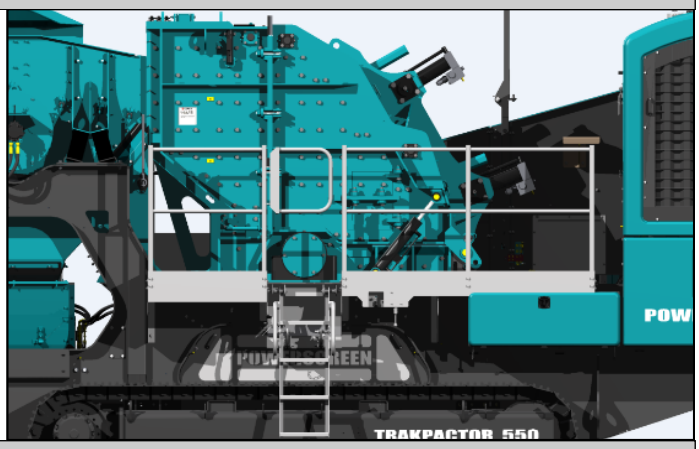

Chassis

Heavy duty I-section of welded construction provides maximum strength & accessibility



All specifications subject to change without prior notice

POWERSCREEN® A TEREX BRAND

Powerscreen® Trakpactor 550

SPECIFICATION - Rev 0. 05-04-2017

Plant Controls

Full PLC control system

Full colour backlit screen

Complete pictorial user controls

Multi-function backlit menu buttons

Full system diagnostics

Sequential auto start up

Main controls

- **Engine/crusher speed**
- **Feeder (start/stop/speed)**
- **Product conveyor + pan feeder (start/stop)**
- **Product conveyor raise/lower**
- **Side conveyor**
- **Crusher control/screen setup**



Umbilical controls

An umbilical control unit is supplied with the plant

This is used to control the tracking function & is also fitted with a stop button for the plant



Optional Extras

- **Hazemag Chamber**
- **2 deck live pre-screen**
- **Grizzly decks 38, 50, 63 & 75mm**
- **Punch plates cartridges 38, 50, 63 & 75mm**
- **Pre-screen meshes 25-75mm (1” - 3”)**
- **High chrome blow bars**
- **Ceramic blow bars**
- **4 full size blow bars in lieu of 2 full 2 half blow bars**
- **Heavy Duty Underpan Feeder**
- **Auto Adjust Bottom Apron (Terex Chamber only)**
- **Reversible Fan**
- **Folding Product Conveyor (4.2m Stockpile)**
- **Left and Right Hand Bypass Conveyor**
- **Single pole or twin pole over-band magnets**
- **Plant lighting**
- **Radio remote control**
- **Electric refuelling pump**
- **Mechanical Belt Weigher**
- **Hydraulic water pump for dust suppression**
- **Hot/Cold Climate Oils**
- **Hopper Extensions (11m3)**
- **Powerscreen Pulse**
- **Fuel Active Delivery System**
- **Control Panel Positive Pressurisation**
- **Dust Suppression**

All specifications subject to change without prior notice

Powerscreen® Trakpactor 550

SPECIFICATION - Rev 0. 05-04-2017

Principal Components of Hazemag Impact Crusher (Optional)

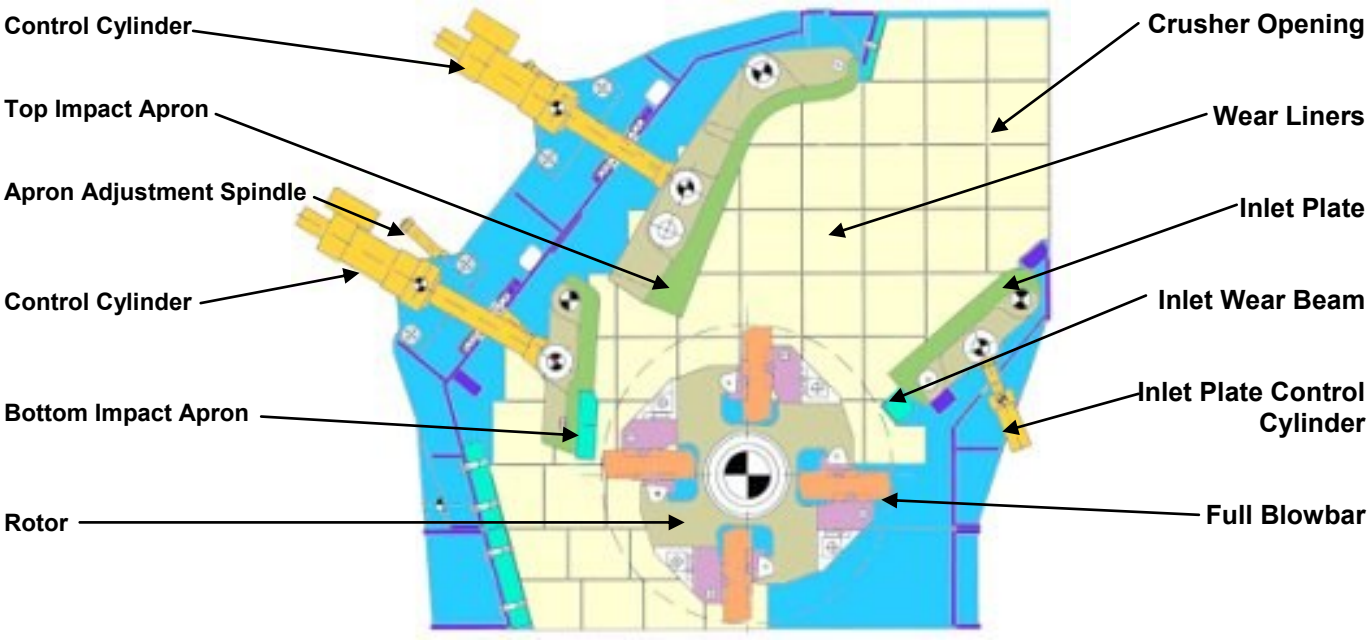

Principles of Operation

Material enters via the crusher opening & slides down the inlet chute where it is struck by the blow bar which is held within the rotor. This initial impact breaks the material which is then accelerated onto the top apron where more reduction takes place on impact. This material then falls back into the blow bars & the cycle repeated until the material is small enough to pass between the apron & the blow bar. Once through this gap, further reduction occurs on the bottom apron until the material can again pass through the gap & discharge from the underside of the crusher.

Any un-crushable material entering the chamber will relieve the overload cylinders & allow the material to pass. The cylinders will then return to the pre-set crushing position. The pre-set gap is adjusted by turning the adjustment spindle whilst the weight of the apron is held on the cylinder (hydraulic assist).

Crusher Specification

▪ Feed opening:	1360mm x 800mm (54” x 32”)
▪ Max lump size*	500mm^3 (20in^3) / 860mm (34”) diagonally / 1000x1000x200mm (39x39x8”) slab * depending on material & blow bar spec
▪ Rotor width:	1340mm (53”)
▪ Rotor diameter:	1200mm (47”)
▪ Number of aprons:	2
▪ Maximum clearance:	273mm (11”) on both aprons
▪ Maximum OSS setting:	200mm (8”) upper apron, 100mm (4”) lower apron
▪ Minimum CSS setting:	75mm (3”) upper apron, 35mm (1.4”) lower apron
▪ Number of blow bars:	4
▪ Blow bar removal:	Vertically
▪ Blow bar configuration:	2 full & 2 half (optional 4 full)
▪ Setting adjustment:	Hydraulic assist
▪ Overload protection:	Hydraulic
▪ Rotor speeds:	540 - 630rpm (34 - 40m/s) (111 - 131ft/s)
▪ Applications:	Demolition / recycling / quarry
▪ Crusher weight:	14,855kg (32,750lbs)
▪ Full blow bar weight:	410kg (904lbs)
▪ Side Liners:	20mm thick, abrasive resistant steel

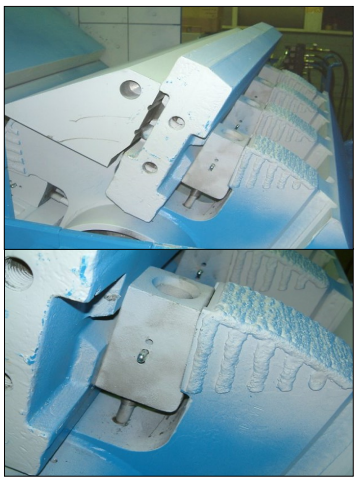

Views from inside the Hazemag Impact Crusher, showing blow bars, wedges & rotor

All specifications subject to change without prior notice

Hazemag Impact Crusher (Optional)

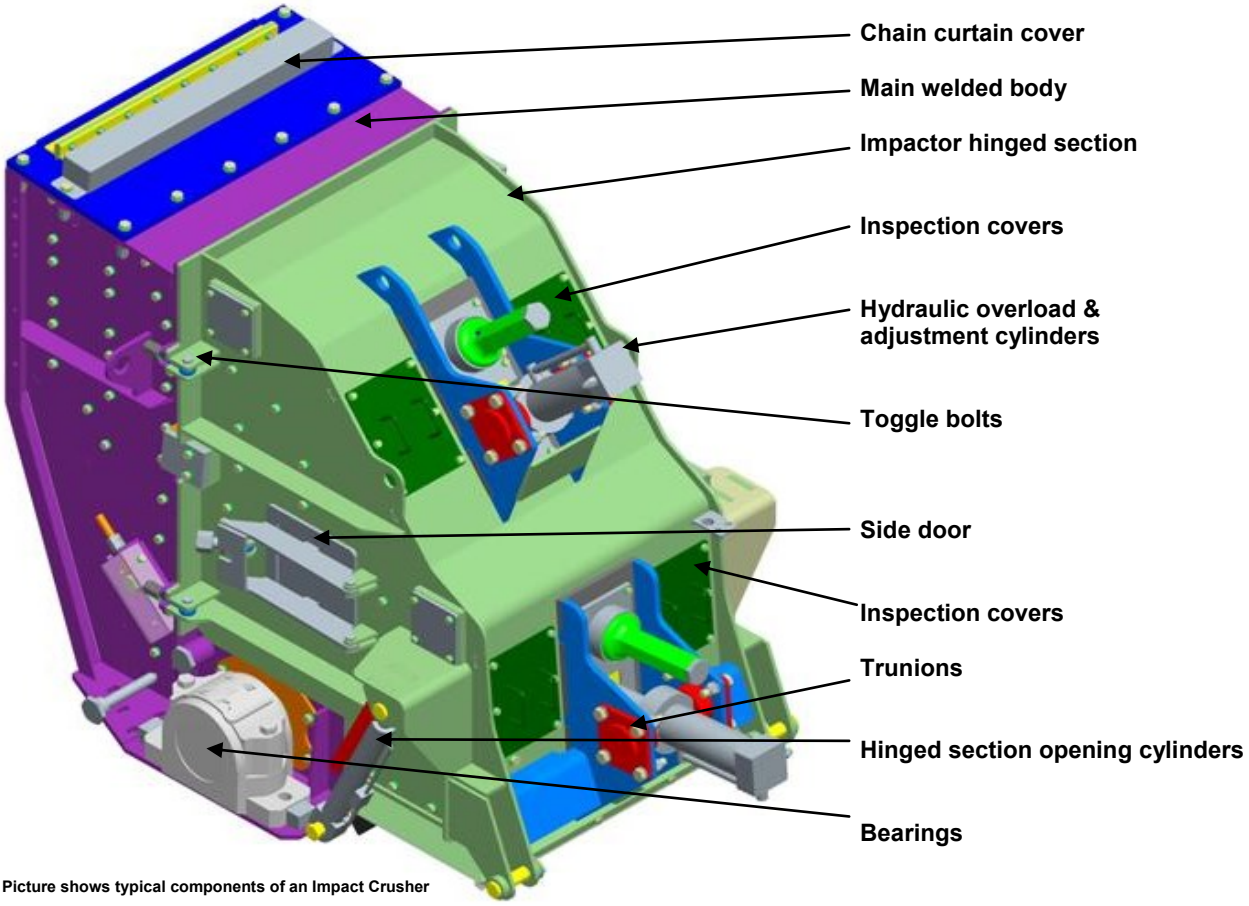

Picture shows typical components of an Impact Crusher

Main Features

Crusher body:	**Fabricated from steel plate & fully lined with replaceable abrasion resistant liner plates. Hinged side door allows access to apron tips & rotor for gap measurements & inspection. Complete hinged section opens hydraulically to allow blow bar removal & replacement, apron & liner replacement or major maintenance**
Rotor:	**Cast steel & fitted with 4 reversible & replaceable blow bars**
Bearings:	**Double row self aligning spherical roller bearing fitted each end of rotor**
Aprons:	**Cast steel aprons with replaceable abrasion resistant wear plate on tip of bottom apron**
Drive:	**Direct through wedge belts with tensioning system on the power unit**
Lubrication:	**Rotor bearings are greased & fitted with inner & outer labyrinth seals**
Blow bars:	**Standard blow bar is martensitic steel, options available in high chrome & ceramic**

This plant is designed for both demolition & quarrying applications. When fitted with martensitic or ceramic blow bars the crusher will tolerate small quantities of steel reinforcing bar in the feed. However, the machine is not designed to accept large pieces of steel or other uncrushable objects, & the feed material should be assessed / inspected for suitability prior to crushing. It is vitally important that large pieces of steel or similar un-crushable objects are not allowed to enter the crushing chamber as severe damage & injury may occur.
When high chrome bars are fitted, *all* steel should be removed from the feed material & the machine should only be used on quarry applications, or clean materials such as asphalt.

Powerscreen® Trakpactor 550 Options

SPECIFICATION - Rev 0. 05-04-2017

Bypass Conveyor

Conveyor type:	**Troughed EP400/3 4+2 covers hydraulically folding**
Width:	**800mm**
Discharge height:	**3.2m (10' 6")**
Stockpile volume:	**48.3m^3**
Drive:	**Direct hydraulic motor**
Lubrication:	**Centralised grease points for lubrication of shaft bearings**
Position:	**RHS or LHS**



Pan Feeder & Live Pre-screen

Vibrating pan feeder with 2 deck live pre-screen

Pan type:	**Spring mounted vibrating pan**
Vibrating unit:	**Twin heavy duty cast eccentric shafts running in spherical roller bearings, gear coupled at drive end, flange mounted hydraulic motor**
Dimensions:	**Length: 2.96m (9' 8") Width: 1.19m (3' 11")**

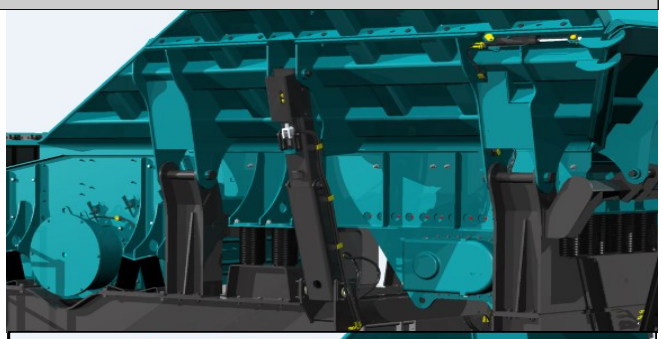

Pre-screen:	**Spring mounted vibrating unit with stepped finger bofor deck**
Vibrating unit:	**Single shaft, out of balance weights, flange mounted hydraulic motor**
Dimensions:	**Length: 2.1m (6' 11") Width: 1.27(4' 2")**
Bofor deck:	**2 stepped bolt in cartridges with 1m (39") long self cleaning fingers 50mm (2") nominal spacing as standard.**
Control:	**Variable speed control though control panel & (radio remote optional)**
Chute:	**Bypass chute with internal 2 way flap door fitted, to control direction of fines, either forward onto the product belt or onto the optional side convey-or (if blanking mat is fitted)**

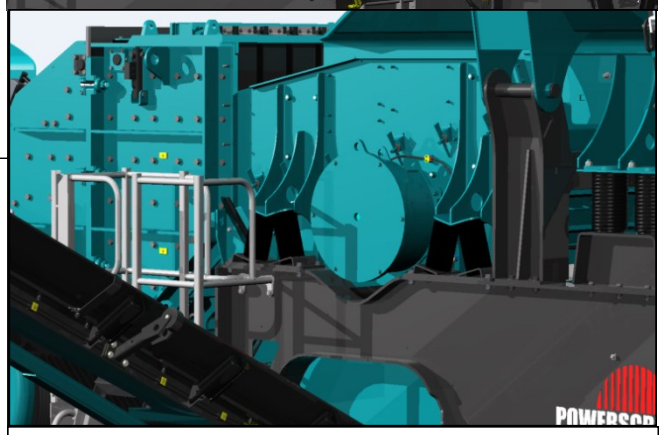

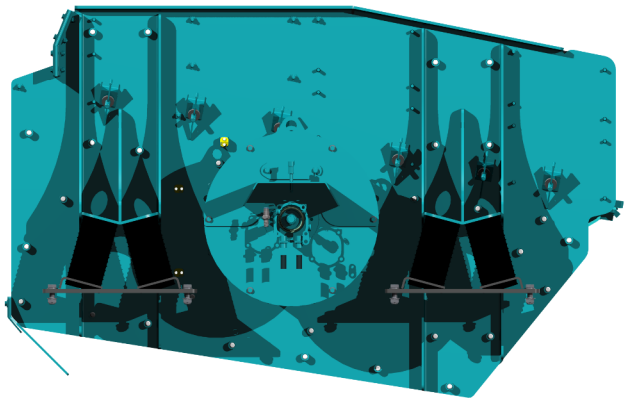

All specifications subject to change without prior notice

Powerscreen® Trakpactor 550 Options

SPECIFICATION - Rev 0. 05-04-2017

Hopper Extensions

Hopper width:	2.62m (8’ 7”)
Hopper capacity:	11m^3 (14.4 cu. yd.)
Body:	10mm thick abrasion resistant steel plate

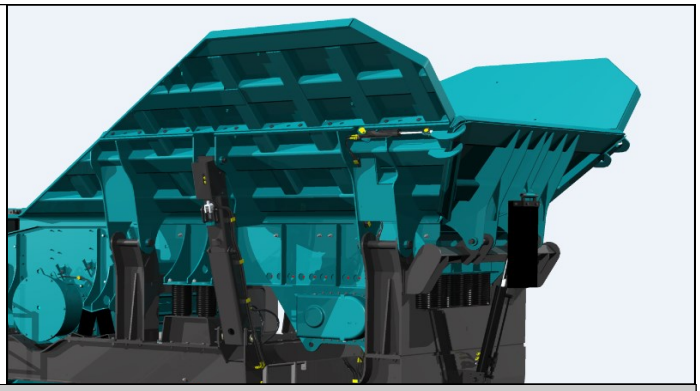

Single Pole & Twin Pole Magnets

Magnet type:	Suspended self cleaning over band with endless belt
Magnet block:	836 x 530mm (33” x 21”)
Drive:	Direct drive hydraulic motor
Control:	Pre-set variable speed
Discharge:	Via stainless steel shedder plate

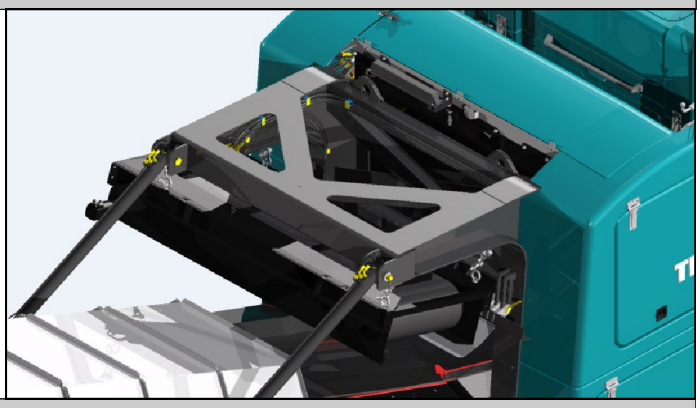

Extended Product Conveyor

Hydraulically Folding for Transport

Discharge Height:	4.2m (13’ 9”)
Stockpile Volume:	131m^3

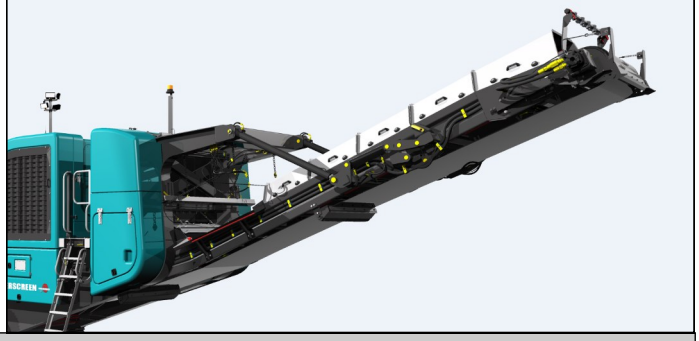

Blow Bars

Standard blow bars supplied with plant are 2 high & 2 half martensitic steel. 2 further options are available:

High chrome:	Suitable for medium to hard rock applications where no steel is present in the feed material. Good wear characteristics
Ceramic:	Suitable for applications with limited steel in feed. Improved wear characteristics over standard martensitic blow bars
4 full blow bars:	Available in all options



Powerscreen® Trakpactor 550 Options

SPECIFICATION - Rev 0. 05-04-2017

Mechanical Belt Weigher

Mechanical belt scale, monitors material volume as it passes onto Product Conveyor.

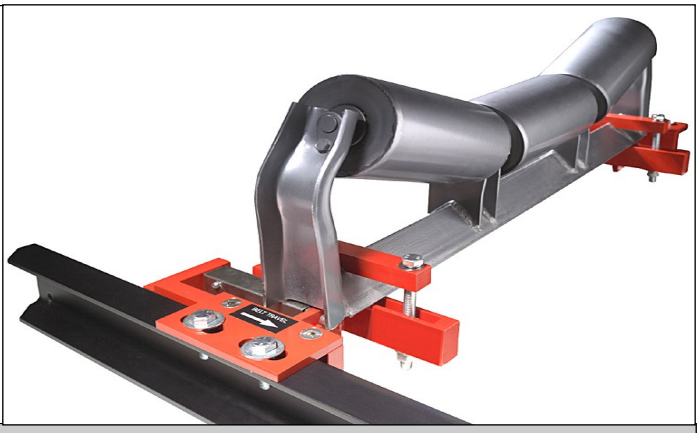

Fuel Active Delivery System

The FuelActive® fuel delivery system works by using a float to track the level of fuel in the tank. Drawing fuel from the upper limit of the fuel ensures that the throughput of water and contaminants is reduced by more than 300%, allowing the equipment to run for longer periods.

- Reduces Emissions
- Preserves Engine Performance
- Improves Fuel Economy

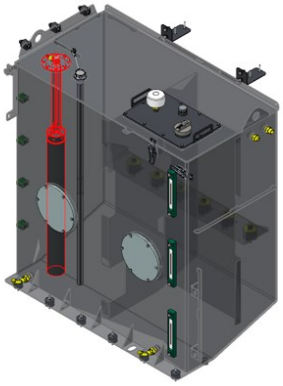

Electric Refuelling Pump

A refuelling pump, allows fuel to be drawn from a remote source. Fuel transfer rate is 50 L/min (13 G/min)

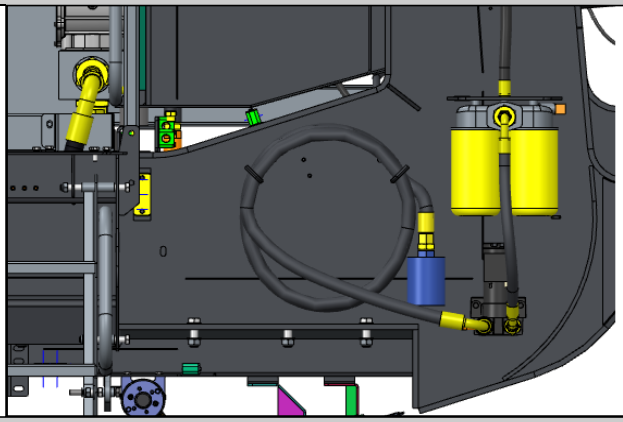

Radio Remote Control

Complete with integrated tracking functions & plant stop button.

NB— Only available in certain countries where type approval has been obtained

Remote can also be used to:

- **Feeder (start/stop/speed)**
- **Product conveyor (raise/lower)**
- **Open top apron**



Powerscreen® Trakpactor 550 Options

Vibrating Pan Feeder

Type: Steel bodied vibrating feeder fitted with stainless steel liners, mounted under the crusher & designed to prevent any impact damage to the product conveyor

Width: 1.33m (4' 4")

Length: 2.5m (8' 2")

Drive: Twin hydraulic driven out of balance vibrator units

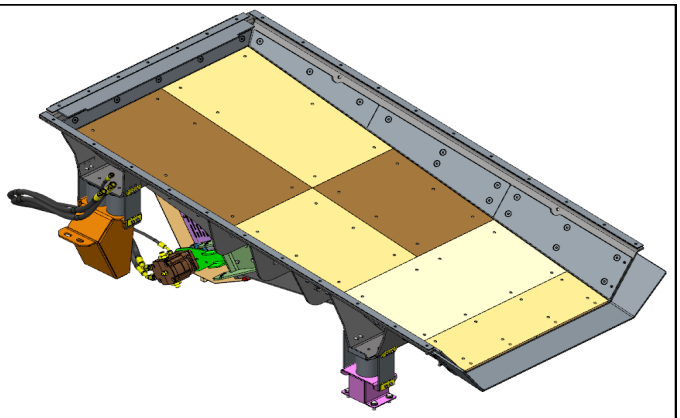

Hot/Cold Climate Oils

Cold climate oils - (Recommended for ambient temperatures between -20ºC to +30ºC

Hot climate oils - (Recommended for ambient temperatures between +15ºC to +50ºC



Control Panel Positive Pressurisation

An additional unit designed to reduce dust particles within the Control Panel.

A continuous flow of clean air is passed through the cabinet whilst the unit simultaneously filters out any particulate laden air.

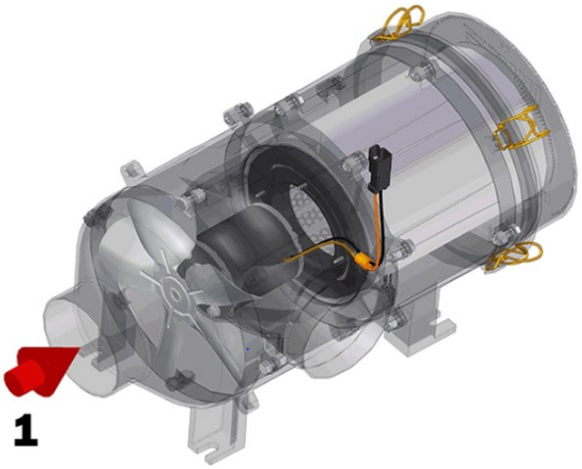

Powerscreen Pulse

Powerscreen Pulse, which is fitted as standard, is a system which allows the machine to relay performance and production data via phone networks, or by satellite when there's no cellular signal, to any device with a web browser, such as a PC, tablet or Smartphone.



Powerscreen® Trakpactor 550

SPECIFICATION - Rev 0. 05-04-2017

Approximate Plant Weights & Dimensions

Transport length:	**17.41m**	**(57’ 1”) (VGF & standard product conveyor)**
Transport height:	**3.8m**	**(12’ 6”)**
Transport width:	**3m**	**(9’ 10”)**

Total plant weight: **54,850kg (115,919lbs) including bypass conveyor & standard magnet**

Trakpactor 550 (VGF & Standard Product Conveyor) Transport Dimensions

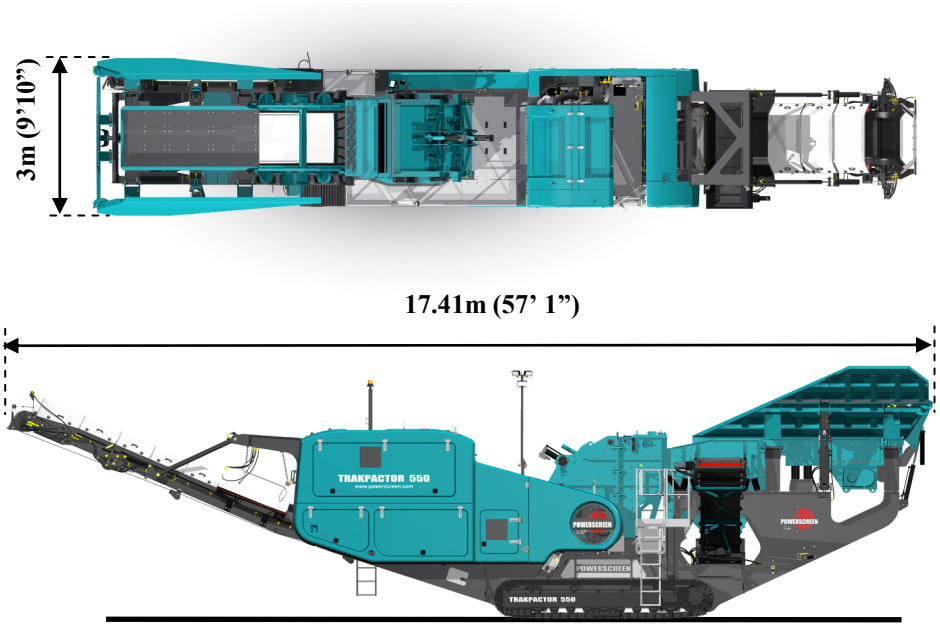

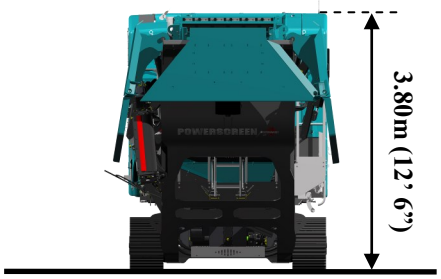

Powerscreen® Trakpactor 550

SPECIFICATION - Rev 0. 05-04-2017

Approximate Plant Weights & Dimensions

Working length:	**17.13m**	**(56'2'') (VGF & standard product conveyor)**
Working height:	**4.16m**	**(13' 8'')**
Working width:	**6.96m**	**(22' 10'') (Bypass conveyor deployed & hopper extensions)**

Total plant weight: **54,850kg (115,919lbs) including bypass conveyor & standard magnet**

Trakpactor 550 (VGF & Standard Product Conveyor) Working Dimensions

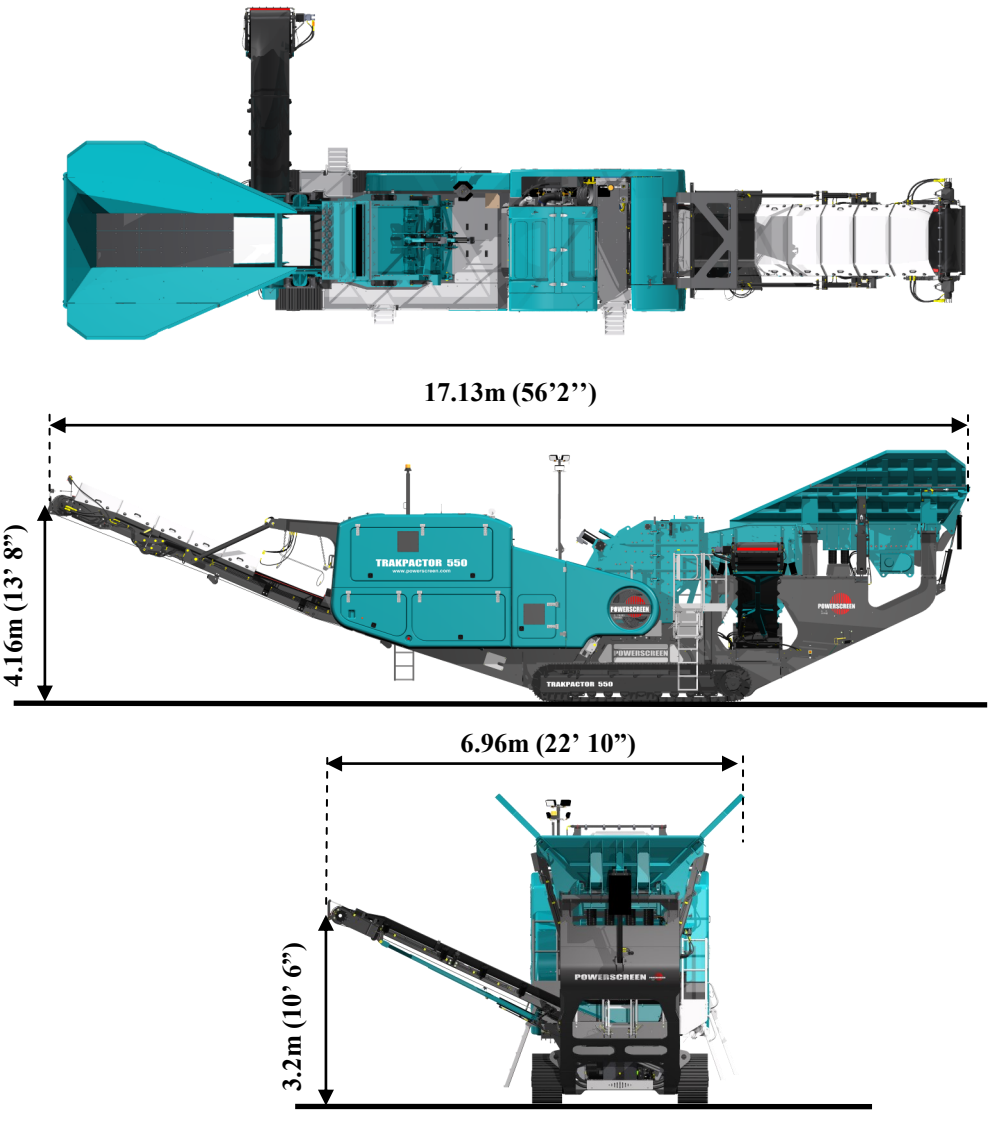

All specifications subject to change without prior notice

Powerscreen® Trakpactor 550

SPECIFICATION - Rev 0. 05-04-2017

Powerscreen equipment complies with CE requirements.

Please consult Powerscreen if you have any other specific requirements in respect of guarding, noise or vibration levels, dust emissions, or any other factors relevant to health and safety measures or environmental protection needs. On receipt of specific requests, we will endeavour to ascertain the need for additional equipment and, if appropriate, quote extra to contract prices.

All reasonable steps have been taken to ensure the accuracy of this publication, however due to a policy of continual product development we reserve the right to change specifications without notice.

It is the importers' responsibility to check that all equipment supplied complies with local legislation regulatory requirements.

Plant performance figures given in this brochure are for illustration purposes only and will vary depending upon various factors, including feed material gradings and characteristics. Information relating to capacity or performance contained within this publication is not intended to be, nor will be, legally binding.

Terex GB Ltd.
200 Coalisland Road
Dungannon
Co. Tyrone
Northern Ireland
BT71 4DR

Tel: +44(0) 28 8774 0701
Fax: +44(0) 28 8774 6569

E-Mail: sales@powerscreen.com
Web: www.powerscreen.com

Terex is a registered trademark of Terex Corporation in the United States of America and many other countries.
Powerscreen is a registered trademark of Terex GB Ltd in the United States of America and many other countries.

Copyright Terex Corporation 2017