POWERSCREEN®
CT-140R
RADIAL TELESCOPIC CONVEYOR

POWERSCREEN®
A TEREX BRAND

GET STARTED



TECHNICAL SPECIFICATION - REV 1 01/01/2022

To use my interactive features I need to be opened in 'Adobe Acrobat Reader' click here to download



CT-140R RADIAL TELESCOPIC CONVEYOR

- OVERVIEW
- FEEDBOOT
- DISCHARGE CONVEYOR
- CHASSIS OPTIONS
- OPTIONS
- DIMENSIONS

OVERVIEW

SPECIFICATION

	Road Version	Pit Version
Total Weight	27,000kg (59,525lbs)	TBC
Axle Weight	20,000kg (44,092lbs)	TBC
Kingpin Weight	7,000kg (15,432lbs)	TBC
Transport Length	27.26m (89' 5'')	27.79m (91' 2'')
Transport Height	4.33m (14' 2'')	5.19m (17')
Transport Width	3.46m (11' 4'')	3.28m (10' 9'')
Drum Min Length (Retracted)	27.2m (89' 5'')	27.2m (89' 5'')
Working Width (Gull Wing Axle Down)	6.8m (22' 3'')	8.3m (27' 2'') wheels in radial
Min Height	4.2m (13' 9'')	4.2m (13' 9'')
Min Working Angle	6°	6°
Drum Max Length (Extended)	42.45m (139' 3'')	42.45m (139' 3'')
Max Height	14.4m (47' 2'')	14.4m (47' 2'')
Max Working Angle	18°	18°
Plant Colour	Grey RAL 7024	Grey RAL 7024

NOTE: Dimensions may differ slightly from sales drawings due to differences in angles / reference points.

FEATURES & BENEFITS

- High capacity up to 400tph (441 US tph). Option for up to 600tph (661 US tph)
- Maximum feed size up to 100mm (4'').
- Eliminates the need for wheeled loaders to create stockpiles - reduces labour and maintenance costs.
- Eliminates the need for handling material multiple times - reduces labour and maintenance costs.
- Improved material quality due to reduced compaction, degradation, segregation and contamination.
- Can accept loads from multiple sources.
- Multiple hopper options available depending on required capacities and operators loading methods or application.
- Rapid set up time and manoeuvrability around site.
- Reduced fuel consumption due to reduced reliance on wheeled loaders.
- Reduced wear on wheeled loaders where a conveyor is utilised.
- Various discharge heights from 26.2m to 42.25m
- Automated stockpile patterns - Radial windrow, inline windrow, radial conical, inline conical
- Feedboot sealed with slider pads as standard for maximum feedboot sealing.
- Heavy duty belt tensioner.
- Hydraulic kingpin to conveyor turntable for quick set up.
- Hydraulic jacking legs to raise for transport with deployment engine.
- Outer conveyor full length under gurards and side guards for safety.
- Winch with encoder to control position of inner conveyor.
- Hydraulic discharge height adjustment.
- Additional side guarding for added protection and safety.

APPLICATIONS

Aggregate
Sand & gravel
Blasted rock
River rock

Recycling
C&D waste
Foundry waste

Mining
Processed ores
Processed minerals



CT-140R RADIAL TELESCOPIC CONVEYOR

- OVERVIEW
- FEEDBOOT
- DISCHARGE CONVEYOR
- CHASSIS OPTIONS
- OPTIONS
- DIMENSIONS

FEEDBOOT

FEEDBOOT DEAD BOX (STANDARD)

Standard Feedboot Capacity:	1.1 m^3 (1.4yd^3)
Feed in Width:	1632mm (5’ 4”)
Extended Feedboot Capacity:	2.1m^3 (2.75yd^3)
Extended Feed in Width:	1850mm (6’ 1’’)
Standard Min Feed Height:	2850mm (9’ 4”)
Extended Min Feed Height:	3120mm (10’ 3”)

Reduced wear on hopper.

Acts as a ballast weight when filled with material to improve stability.

Easily removed for maintenance - fastened via wedge and pin.

FEEDBOOT TAPERED (LINED)

Standard Feedboot Capacity:	0.91 m^3 (1.17yd^3)
Feed in Width:	1576mm (5’ 2”)
Extended Feedboot Capacity:	1.9m^3 (2.49yd^3)
Extended Feed in Width:	1850mm (6’ 1’’)
Standard Min Feed Height:	2850mm (9’ 4”)
Extended Min Feed Height:	3120mm (10’ 3”)

Feedboot is tapered (70mm wider at the front) to aid material flow.

Impact bars at each side to help reduce spillage.

Impact rollers in the base of the feedboot.





CT-140R RADIAL TELESCOPIC CONVEYOR

- OVERVIEW
- FEEDBOOT
- DISCHARGE CONVEYOR
- CHASSIS OPTIONS
- OPTIONS
- DIMENSIONS

DISCHARGE CONVEYOR

INNER CONVEYOR

Width:	900mm (36'')
Belt Centres:	18.8m (61' 8")
Belt Type:	Plain
Belt Spec:	EP400 3 4+2
Drive Drum Dia:	420mm (16.5'')
Tail Drum Dia:	400mm (15.7'')
Max Belt Speed:	144m/m
Motor Size 400tph:	2 x 7.5kW
Motor Size 600tph:	2 x 9.2kW

OUTER CONVEYOR

Width:	900mm (36'')
Belt Centres:	25.3m (83')
Belt Type:	Plain
Belt Spec:	EP400 3 4+2
Drive Drum Dia:	425mm (16.7'')
Tail Drum Dia:	400mm (15.7'')
Max Belt Speed:	115m/m
Motor Size 400tph:	2 x 9.2kW
Motor Size 600tph:	2 x 11kW
Operating Angle:	6º - 18º

STOCKPILE CAPACITIES - CONICAL 18º - FULL EXTENSION

0º radial:	4,890m³ (6,400 cu.yd)
30º radial:	10,540m³ (13,790 cu.yd)
60º radial:	16,190m³ (21,180 cu.yd)
90º radial:	21,840m³ (28,570 cu.yd)
120º radial:	27,490m³ (35,960 cu.yd)
150º radial:	33,140m³ (43,340 cu.yd)
180º radial:	38,800m³ (50,750 cu.yd)
270º radial:	55,750m³ (72,920 cu.yd)





CT-140R RADIAL TELESCOPIC CONVEYOR

- OVERVIEW
- FEEDBOOT
- DISCHARGE CONVEYOR
- CHASSIS OPTIONS
- OPTIONS
- DIMENSIONS

CHASSIS OPTIONS

ROAD CHASSIS



Road towable versions will come with a 5hp deployment engine to power the hydraulic jack legs and kingpin swivel to raise / lower the feedboot end of the unit to hook onto a lorry.

Will come with lights and mud flaps along with braked tandem axles which are lifted out of the way by the radialling wheels when in stockpiling mode.

***NOTE* It is the customers responsibility to ensure that the road towable version complies with road regulations in their area.**

PIT CHASSIS



Pit chassis is not suitable for road towing.

Comes with jacking legs which are raised and lowered by the power source that is used to drive the conveyors.

Raising or lowering these jacking legs will allow the wheels to be positioned for either transport or radial stockpiling.

***NOTE* The customer must choose which chassis they require.**



CT-140R RADIAL TELESCOPIC CONVEYOR

- OVERVIEW
- FEEDBOOT
- DISCHARGE CONVEYOR
- CHASSIS OPTIONS
- OPTIONS
- DIMENSIONS

OPTIONS

- Belt weigher
- Pull cord E-Stop
- Feedboot lined 6mm steel liner
- Feedboot lined 6mm wear plate (AR400)
- Feedboot lined 12mm wear plate (AR400)
- Feedboot lined 20mm rubber
- Chevron belt EP315 3 Ply 3+1.5
- Heavy duty belt EP500 3+1 Ply 8+2
- Working lights
- Belt Weigher
- Twin radial drive for high resistance drive application.
- Low level grease points for inner & outer conveyor.
- 5hp deployment engine (265L hydraulic tank)
- Towing eye - road towable only
- Lorry mount kit - with 5hp deployment engine, hydraulic jacking legs & hydraulic kingpin swivel - pit chassis only as comes as standard with the road version.
- 600tph version - power requirements below:

	400tph	600tph
Hydraulic Raise / Lower & Radial	11kW	
Winch (Inner Conveyor Extend / Retract)	4.4kW	
Outer Conveyor	2 x 9.2kW	2 x 11kW
Inner Conveyor	2 x 7.5kW	2 x 9.2kW
Total Power Requirements	*48.4kW*	*55.8kW*





CT-140R RADIAL TELESCOPIC CONVEYOR

- OVERVIEW
- FEEDBOOT
- DISCHARGE CONVEYOR
- CHASSIS OPTIONS
- OPTIONS
- DIMENSIONS

DIMENSIONS

Figure 1: Powerscreen CT-140R
Working Position - Pit Version Retracted

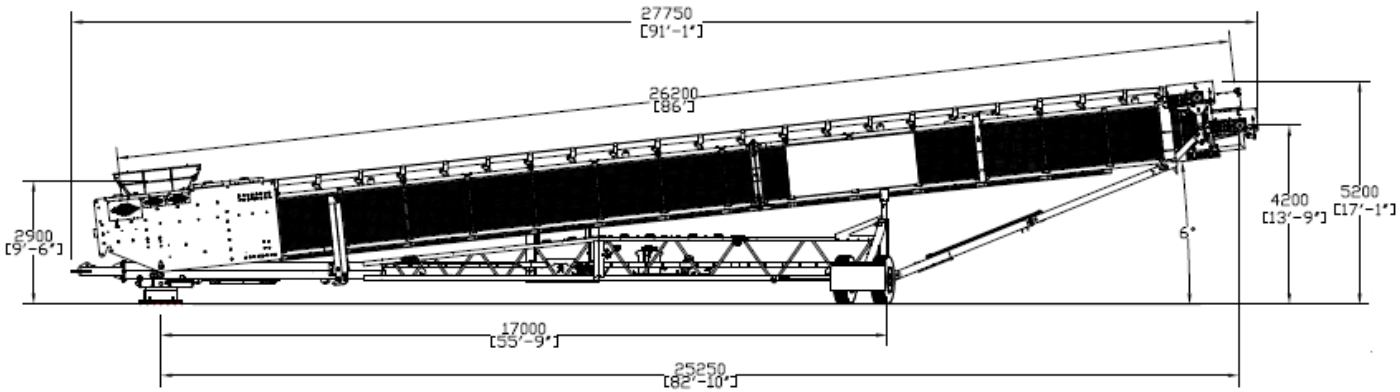

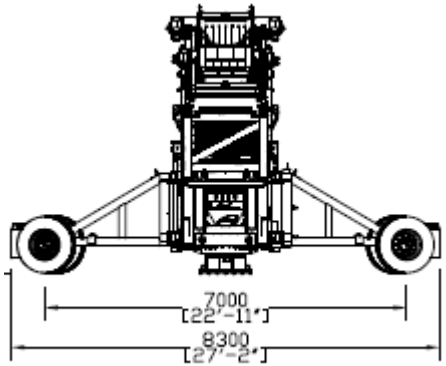

MORE DIMENSIONS OVERLEAF



CT-140R RADIAL TELESCOPIC CONVEYOR

- OVERVIEW
- FEEDBOOT
- DISCHARGE CONVEYOR
- CHASSIS OPTIONS
- OPTIONS
- DIMENSIONS

DIMENSIONS

Figure 2: Powerscreen CT-140R
Working Position - Pit Version Extended

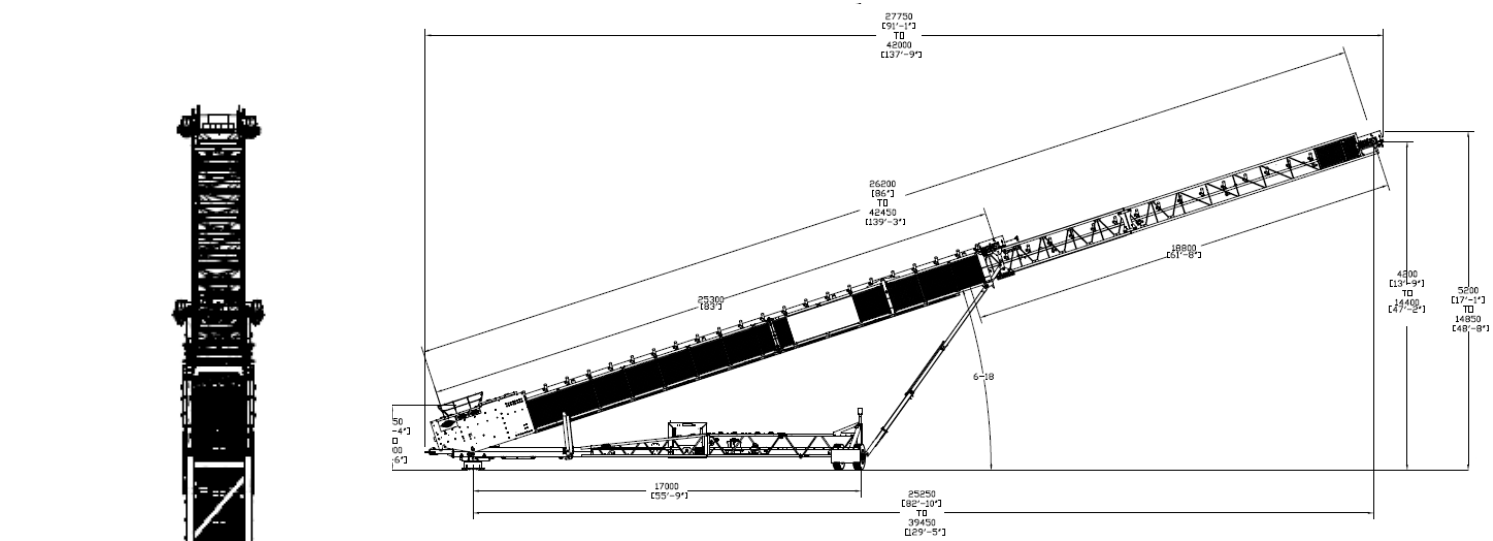

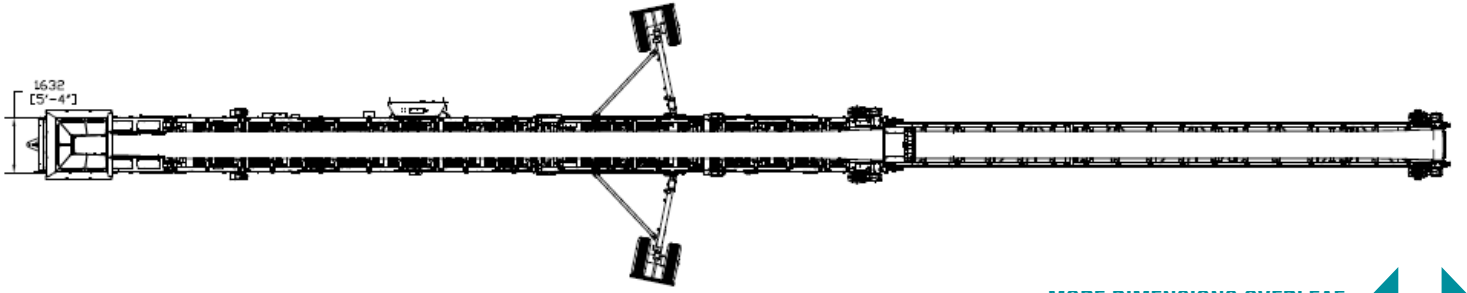

MORE DIMENSIONS OVERLEAF



CT-140R RADIAL TELESCOPIC CONVEYOR

- OVERVIEW
- FEEDBOOT
- DISCHARGE CONVEYOR
- CHASSIS OPTIONS
- OPTIONS
- DIMENSIONS

DIMENSIONS

Figure 3: Powerscreen CT-140R
Working Position - Road Version Retracted

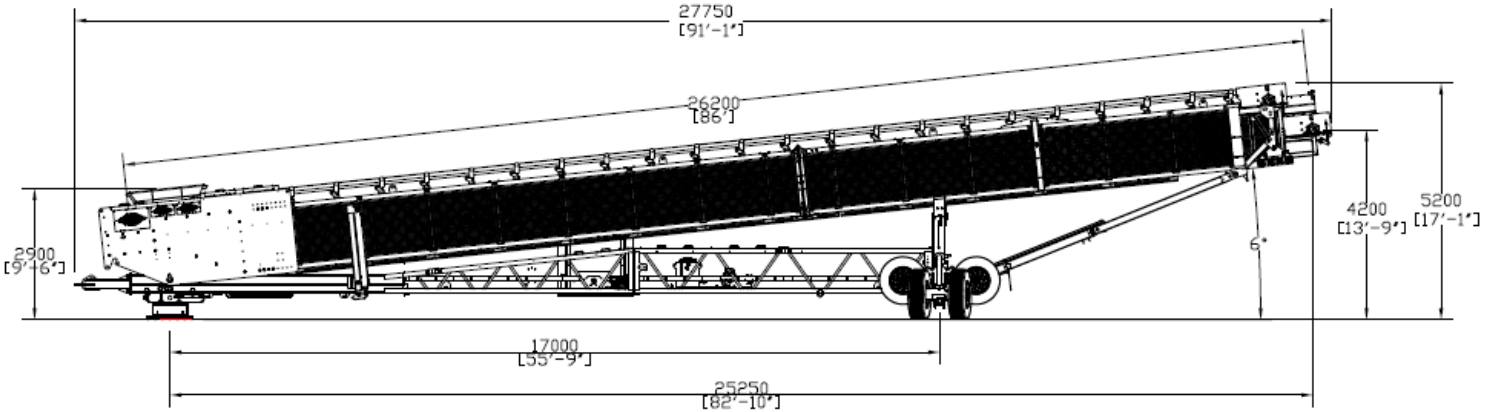

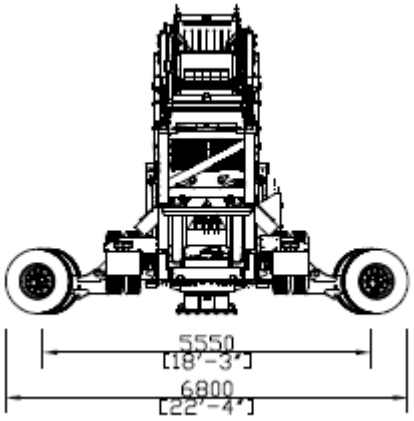

MORE DIMENSIONS OVERLEAF



CT-140R RADIAL TELESCOPIC CONVEYOR

- OVERVIEW
- FEEDBOOT
- DISCHARGE CONVEYOR
- CHASSIS OPTIONS
- OPTIONS
- DIMENSIONS

DIMENSIONS

Figure 4: Powerscreen CT-140R
Working Position - Road Version Extended

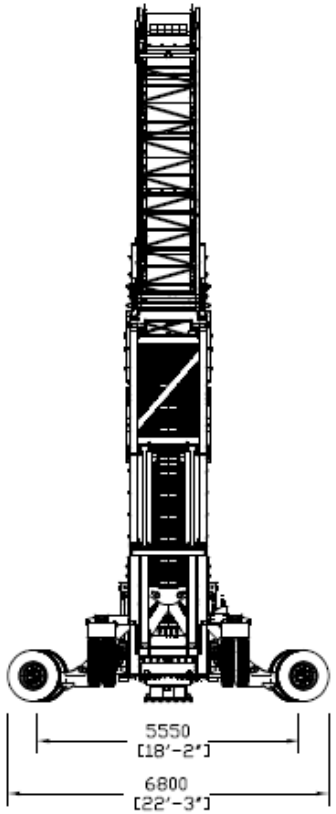

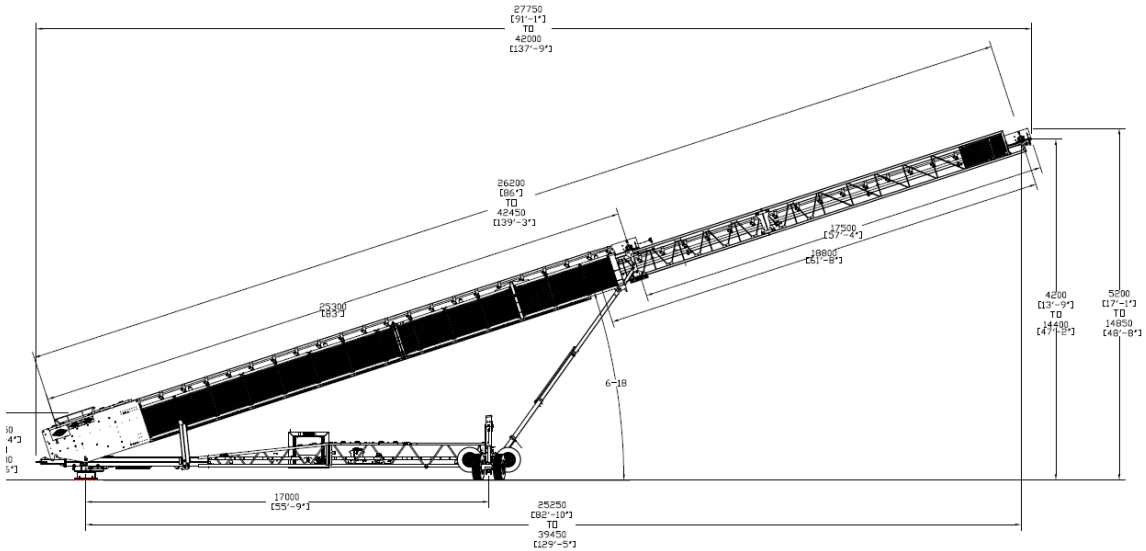

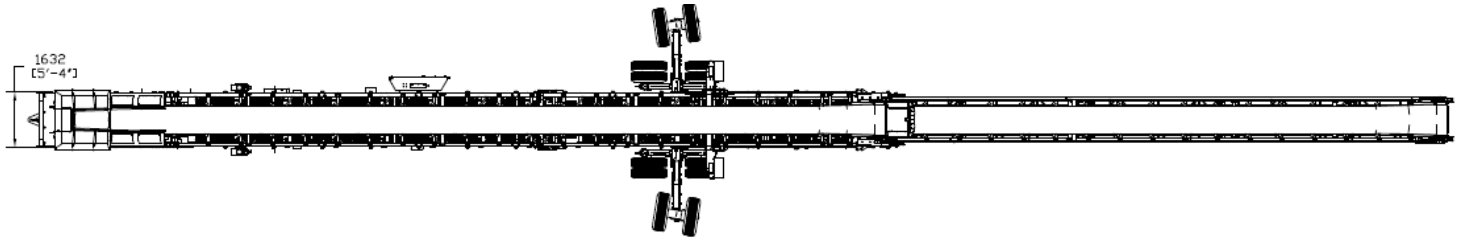

MORE DIMENSIONS OVERLEAF



CT-140R RADIAL TELESCOPIC CONVEYOR

- OVERVIEW
- FEEDBOOT
- DISCHARGE CONVEYOR
- CHASSIS OPTIONS
- OPTIONS
- DIMENSIONS

DIMENSIONS

Figure 5: Powerscreen CT-140R
Transport Position - Pit Version

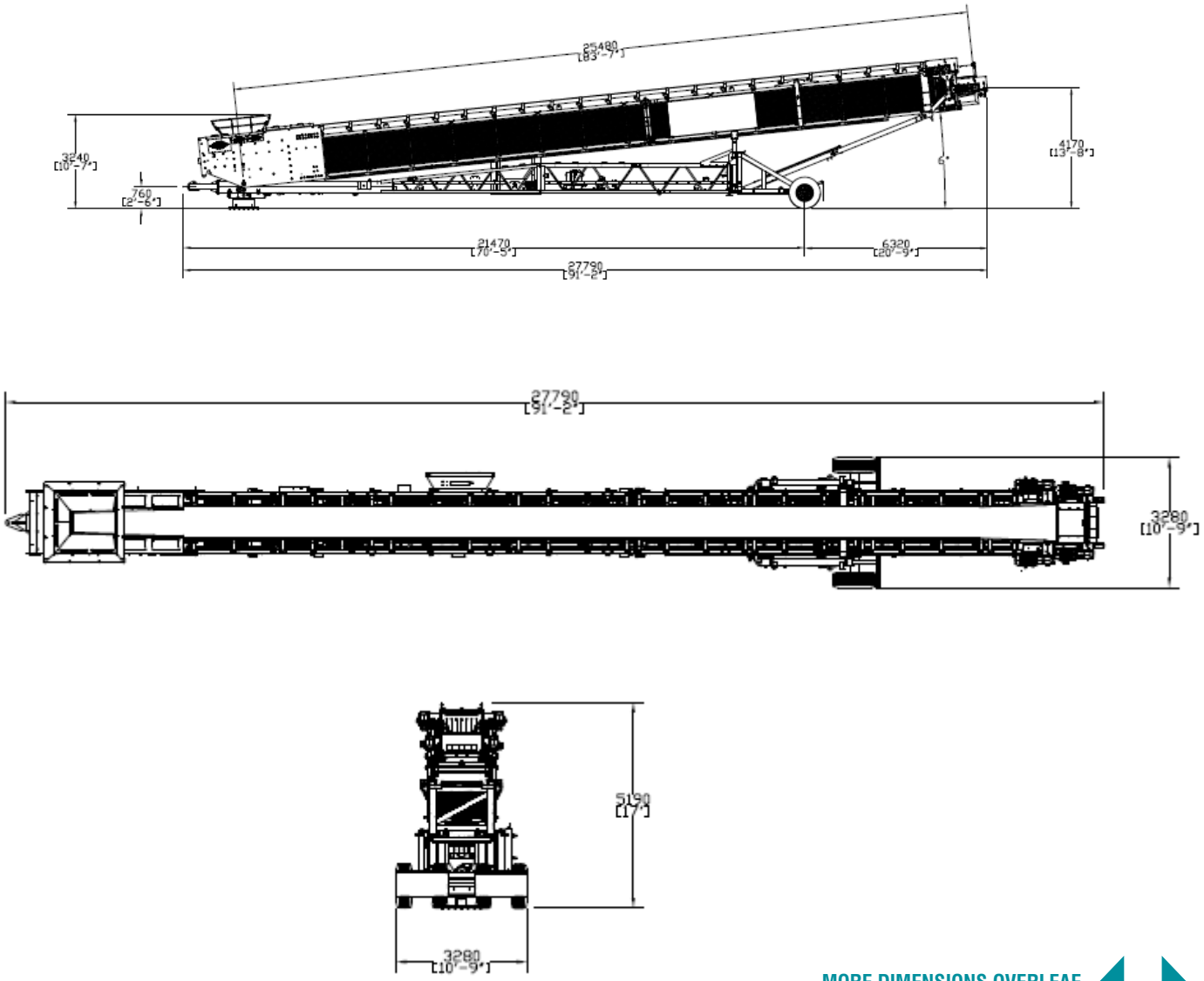

MORE DIMENSIONS OVERLEAF



CT-140R RADIAL TELESCOPIC CONVEYOR

- OVERVIEW
- FEEDBOOT
- DISCHARGE CONVEYOR
- CHASSIS OPTIONS
- OPTIONS
- DIMENSIONS

DIMENSIONS

Figure 6: Powerscreen CT-140R
Transport Position - Road Version

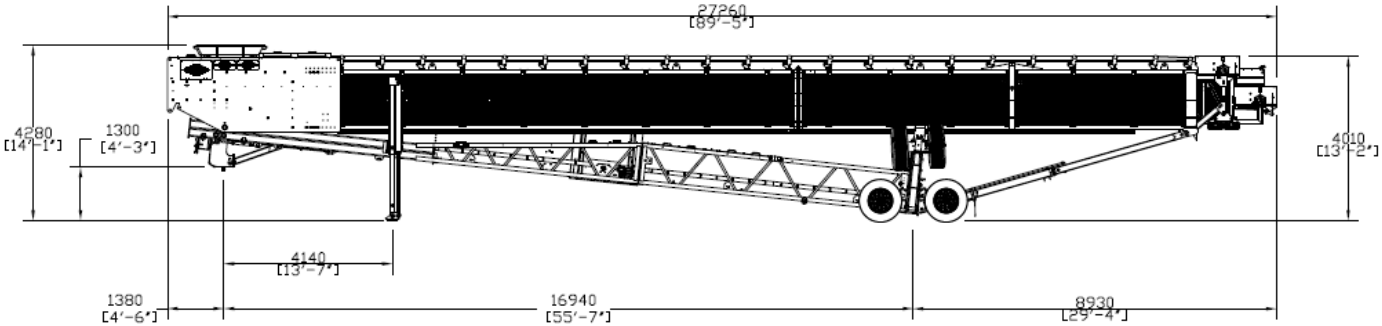

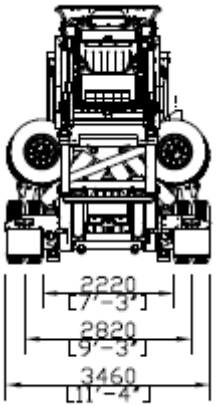

Powerscreen equipment complies with CE requirements.

Please consult Powerscreen if you have any other specific requirements in respect of guarding, noise or vibration levels, dust emissions, or any other factors relevant to health and safety measures or environmental protection needs. On receipt of specific requests, we will endeavour to ascertain the need for additional equipment and, if appropriate, quote extra to contract prices.

All reasonable steps have been taken to ensure the accuracy of this publication, however due to a policy of continual product development we reserve the right to change specifications without notice.

It is the importers' responsibility to check that all equipment supplied complies with local legislation regulatory requirements.

Plant performance figures given in this brochure are for illustration purposes only and will vary depending upon various factors, including feed material gradings and characteristics. Information relating to capacity or performance contained within this publication is not intended to be, nor will be, legally binding.

GET IN TOUCH

Dungannon
200 Coalisland Road, Dungannon,
Co Tyrone, BT71 4DR, Northern Ireland
Tel: +44 (0) 28 87 718 500
Fax: +44 (0) 28 87 747 231

Louisville
11001 Electron Drive,
Louisville, Kentucky, 40299 USA
Tel: +1 502 736 5200
Fax: +1 502 736 5202

www.powerscreen.com