POWERSCREEN®
PREMIERTRAK 330

JAW CRUSHER

GET STARTED



TECHNICAL SPECIFICATION - REV 4 01/05/2025

To use my interactive features I need to be opened in 'Adobe Acrobat Reader' click here to download



PREMIERTRAK 330

- OVERVIEW
- JAW CRUSHER
- HOPPER
- VIBRATING GRIZZLY FEEDER
- PRODUCT CONVEYOR
- POWER UNIT & HYDRAULICS
- TRACKS
- PLANT CONTROLS & OTHER
- OPTIONS
  - OPTIONS 2
- POWERSCREEN® PULSE
- DIMENSIONS

OVERVIEW

SPECIFICATION

Total Weight	34,860kg (76,853lbs)* including single pole magnet, hopper extensions & bypass conveyor	
Transport	**Length**	15.7m (51' 6")
	Height	3.4m (11' 1")
	Width	2.6m (8' 6")
Working	**Length**	15.54m (51')
	Height	3.4m (11' 11'')
	Width	4.6m (15' 1") with bypass conveyor
Crusher Type:	Single toggle jaw, feed opening 1000mm x 600mm (40" x 24")	
Power Unit	Tier 3 John Deere 6068 212kw (284hp) or Tier 4F/Stage V: Caterpillar C7.1 205kW (275hp)	
Plant Colour	Blue RAL 5021, Grey RAL 7024, Black RAL 9005	

FEATURES & BENEFITS

The Powerscreen® Premiertrak 330 is a high performance primary jaw crushing plant and is designed for operators in quarrying, demolition, recycling & mining applications.
User benefits include track mobility for a quick set-up time, hydraulic crusher setting adjustment for total control of product size & crusher overload protection to prevent damage by un-crushable objects.

- Output potential up to 280tph (308 US tph) (Depending on application & CSS)
- Hydrostatic Drive with reverse crush capacity
- Heavy duty wear resistant feed hopper
- Stepped self-cleaning grizzly feeder with under feeder screen
- Wide bypass chute to optimise material flow
- Aggressive crushing action with high swing jaw encouraging material entry into crushing chamber
- Fully hydraulic crusher setting adjustment
- Improved manganese liner retention, protects jaw supports on both swing & fixed jaws
- Excellent under crusher access for removal of wire with hydraulic raise/lower product conveyor (Optional)
- Low fuel consumption due to efficient drive system and low engine RPM
- Easily accessed power unit canopy
- PLC control system with auto start facility
- Remote control via umbilical
- Dust suppression system
- Powerscreen Pulse telemetry as standard
- Radio remote control as standard

APPLICATIONS

Aggregate
Sand & gravel
Blasted rock
River rock

Recycling
C&D waste
Overburden
Foundry waste

Mining
Processed ores
Processed minerals



PREMIERTRAK 330

- OVERVIEW
- JAW CRUSHER
- HOPPER
- VIBRATING GRIZZLY FEEDER
- PRODUCT CONVEYOR
- POWER UNIT & HYDRAULICS
- TRACKS
- PLANT CONTROLS & OTHER
- OPTIONS
  - OPTIONS 2
- POWERSCREEN® PULSE
- DIMENSIONS

JAW CRUSHER

Crusher type: Single toggle Jaw with hydraulic setting adjustment
Feed opening: 1000mm x 600mm (39" x 24")
Bearings: Self aligning spherical roller
Lubrication: Grease
Drive: V belts with screw adjust tensioner
Pre-set: 75mm (3") closed side setting (CSS)
Minimum setting: 40mm (1.5") CSS recycling
50 mm (2") CSS quarry

All setting measured from root to tip & subject to suitability of feed material. This plant has been designed for both quarry & recycling applications where appropriate. For maximum material strength of 390kN 10% Fines, 240MPa compressive strength. If in doubt please contact your dealer or Powerscreen.

Maximum setting: 125mm (5") CSS standard jaws (HA)

Hydraulic adjustment: Hydraulically adjusted C.S.S using wedge system.

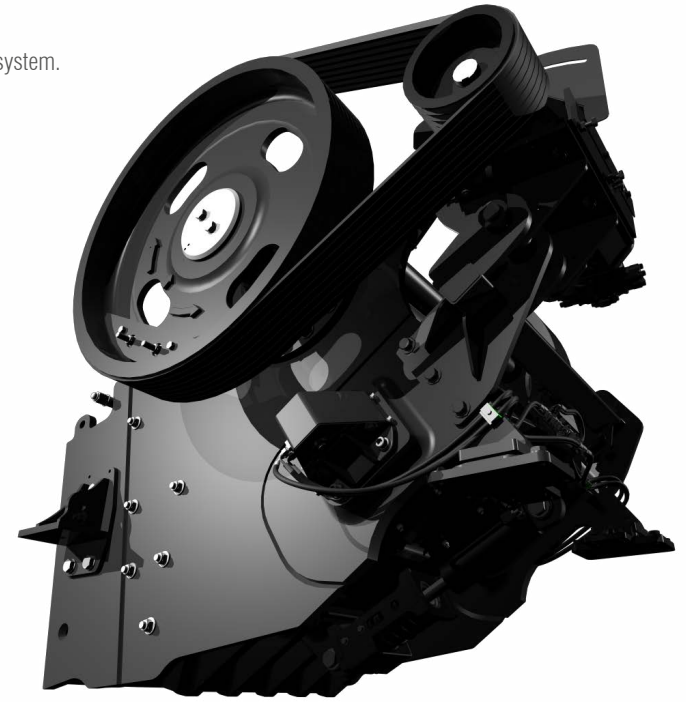

CHAMBER FEATURES

- Hydrostatic with full reverse crush capability
- Quick & easy setting adjustment
- Drawback rod hydraulic adjustments not required during setting changes
- Cartridge type bearings
- Overlap jaw protects tip of jawstock
- One piece fixed jaw support
- Proven manganese liner retention



PREMIERTRAK 330

- OVERVIEW
- JAW CRUSHER
- HOPPER
- VIBRATING GRIZZLY FEEDER
- PRODUCT CONVEYOR
- POWER UNIT & HYDRAULICS
- TRACKS
- PLANT CONTROLS & OTHER
- OPTIONS
  - OPTIONS 2
- POWERSCREEN® PULSE
- DIMENSIONS

HOPPER

Hopper type: Fixed hopper as standard
Hopper length: 4.46m (14' 8")
Hopper width: 2.05m (6' 8") standard
2.8m (9' 2") with extensions
Hopper capacity: 5m³ (6.5 cu. yd.) / 8m³ (10.4 cu. yd.)
Hopper body: 8mm abrasion resistant feed hopper

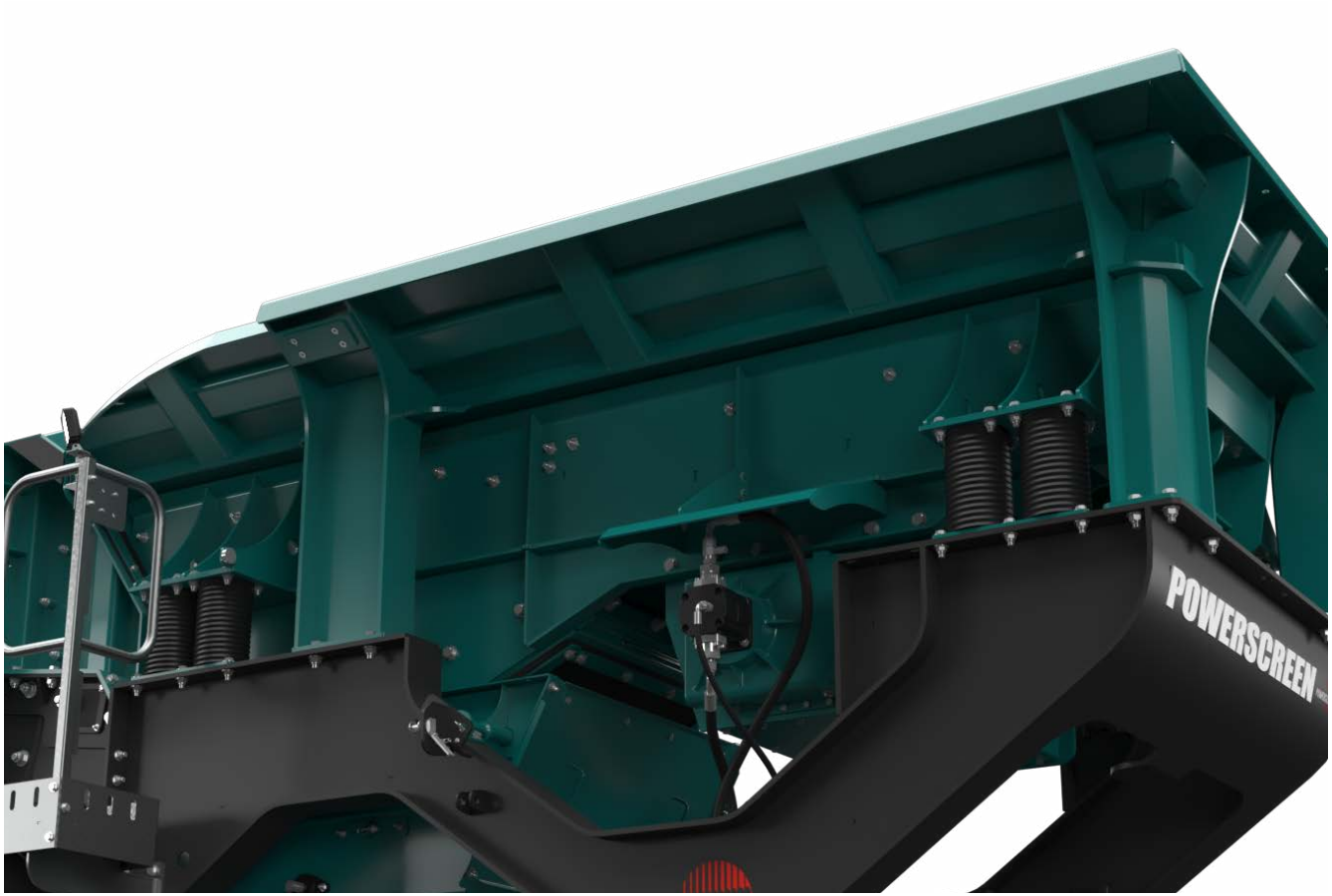



PREMIERTRAK 330

- OVERVIEW
- JAW CRUSHER
- HOPPER
- VIBRATING GRIZZLY FEEDER
- PRODUCT CONVEYOR
- POWER UNIT & HYDRAULICS
- TRACKS
- PLANT CONTROLS & OTHER
- OPTIONS
  - OPTIONS 2
- POWERSCREEN® PULSE
- DIMENSIONS

VIBRATING GRIZZLY FEEDER

Type:	Spring mounted vibrating pan & grizzly feeder
Vibrating Unit:	Twin heavy-duty cast eccentric shafts running in spherical roller bearings, gear coupled at drive end
Drive:	Flange mounted hydraulic motor
Length:	3.75m (12’ 3’’)
Width:	0.94m (3’)
Grizzly:	2 replaceable stepped cartridge type grizzlies 50mm nominal aperture, self cleaning
Grizzly length:	1.89m (6’ 2”)
Under-screen:	30mm mesh fitted as standard

PLANT CHUTE-WORK

Heavy duty fully welded inlet chute with wear resistant liner plates.

Bypass chute with selectable dischare flop gate, to either bypass conveyor or product conveyor

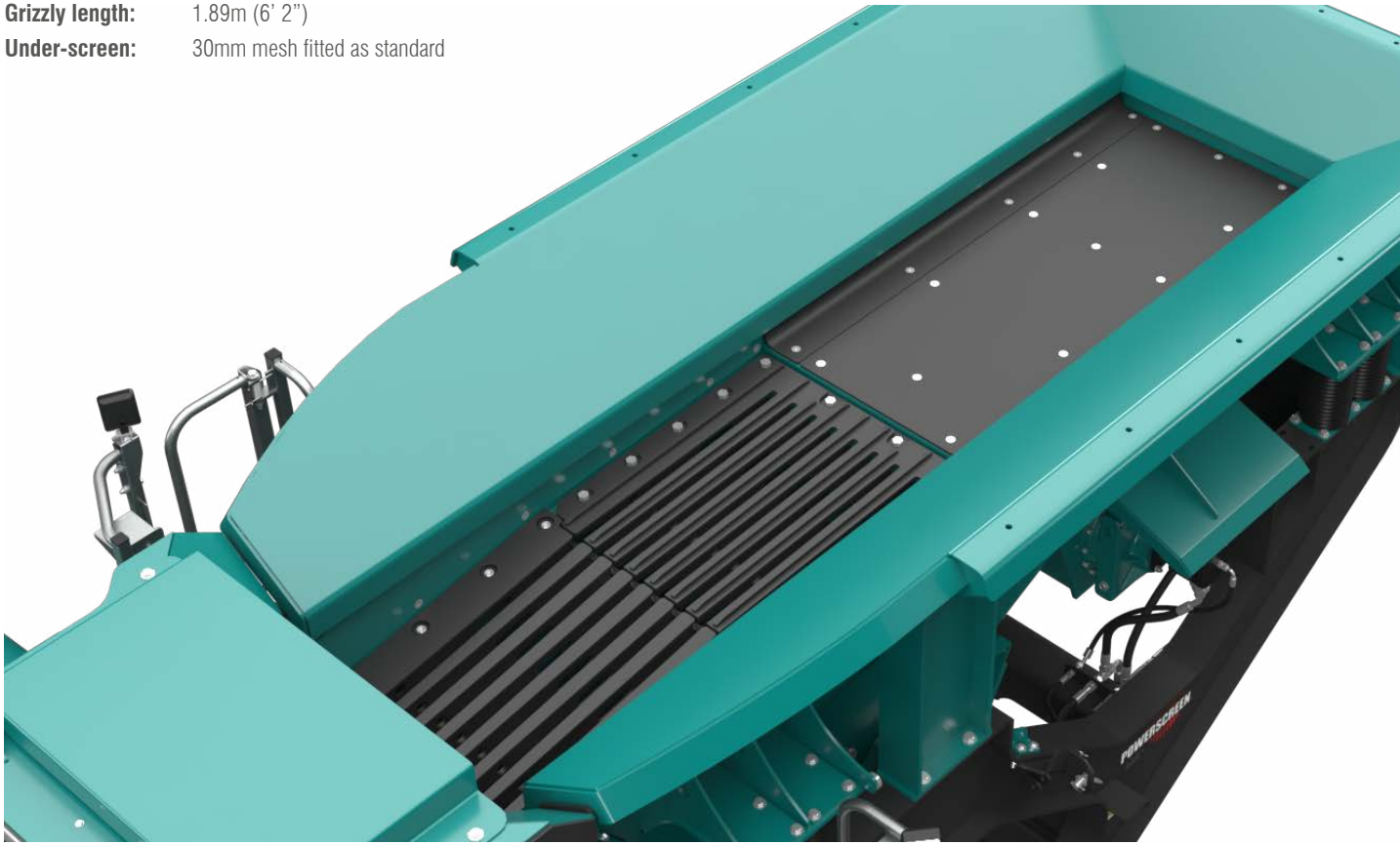



PREMIERTRAK 330

- OVERVIEW
- JAW CRUSHER
- HOPPER
- VIBRATING GRIZZLY FEEDER
- PRODUCT CONVEYOR
- POWER UNIT & HYDRAULICS
- TRACKS
- PLANT CONTROLS & OTHER
- OPTIONS
  - OPTIONS 2
- POWERSCREEN® PULSE
- DIMENSIONS

PRODUCT CONVEYOR

Conveyor type:	Troughed belt conveyor
Design:	Fixed frame at horns to allow for transport. Fully removable modular unit to aid access & maintenance
Belt type:	EP500/3 with 8mm top & 2mm bottom cover, vulcanised
Belt width:	900mm (36”)
Discharge height:	3.58m (11’ 9”)
Stockpile volume:	92m³ (121 cu. yd.)
Drive:	Direct drive hydraulic motor
Tunnel:	Conveyor fitted with tunnel & side covers to minimise rebar snagging
Feedboot:	Mild steel plate with abrasion resistant steel liners at feed point
Belt adjustment:	Screw adjusters at head drum
Belt scraper:	SCS style
Lubrication:	Remote head drum grease points located on conveyor tail section
Skirting:	Wear resistant rubber skirts fitted up to magnet

DUST SUPPRESSION SYSTEM

Sprays bars with atomiser nozzles mounted over crusher mouth. Piped to an inlet manifold for client’s pressured water supply

Type:	Clean water multi-atomising nozzles
Inlet:	Single filtered inlet point on chassis
Pressure:	2.8 bar (42 psi)
Frost protection:	Via system drain valves
Pump:	Optional extra





PREMIERTRAK 330

- OVERVIEW
- JAW CRUSHER
- HOPPER
- VIBRATING GRIZZLY FEEDER
- PRODUCT CONVEYOR
- POWER UNIT & HYDRAULICS
- TRACKS
- PLANT CONTROLS & OTHER
- OPTIONS
  - OPTIONS 2
- POWERSCREEN® PULSE
- DIMENSIONS

POWER UNIT & HYDRAULICS

Tier 3 Equivalent: John Deere 6068, 212kW (284hp)

Operating conditions: Ambient temp. +30°C & –5°C (86F & 23F) altitudes up to 2000m (6562ft) above sea level - For applications outside this range please consult with Powerscreen as the plant performance / reliability may be affected.

Operating rpm range: 1800 rpm (ECO mode 1500rpm)

Plant drive: Hydrostatic

Fuel tank capacity: 640 L (169 US GAL)

Hydraulic tank capacity: 600 L (159 US GAL)

Tier 4F/Stage V: Caterpillar C7.1, 205kW (275hp)

Operating conditions: Ambient temperature +30°C & –5°C (86F & 23F) at altitudes up to 2000m (6562ft) above sea level - For applications outside this range please consult with Powerscreen as the plant performance / reliability may be affected.

Operating rpm range: 1800 rpm (ECO mode 1500rpm)

Emission control technique: Selective Catalytic Reduction (SCR), Diesel Particulate Filter (DPF) & Diesel Oxidation Catalyst (DOC)

Plant drive: Hydrostatic

Fuel tank capacity: 640 L (169 US GAL)

Hydraulic tank capacity: 600 L (159 US GAL)

Urea tank capacity: 60L (16 US GAL)

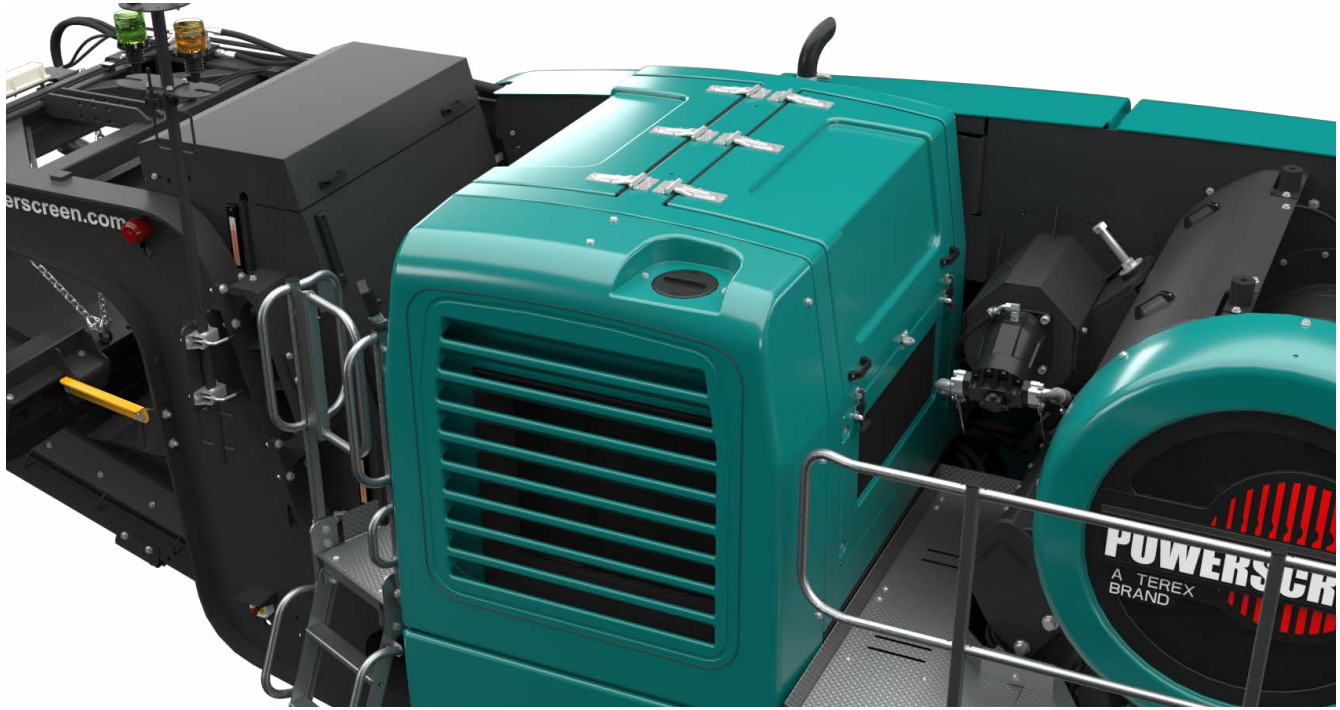



PREMIERTRAK 330

- OVERVIEW
- JAW CRUSHER
- HOPPER
- VIBRATING GRIZZLY FEEDER
- PRODUCT CONVEYOR
- POWER UNIT & HYDRAULICS
- TRACKS
- PLANT CONTROLS & OTHER
- OPTIONS
  - OPTIONS 2
- POWERSCREEN® PULSE
- DIMENSIONS

TRACKS

Type:	Heavy-duty tracks
Sprocket centers:	3.24m (10'8")
Track width:	400 mm (1' 4")
Climbing grade:	30˚ maximum
Max Speed:	1kph (0.63mph)
Drive:	Hydraulic motors
Tensioning:	Hydraulic adjuster, grease tensioner





PREMIERTRAK 330

- OVERVIEW
- JAW CRUSHER
- HOPPER
- VIBRATING GRIZZLY FEEDER
- PRODUCT CONVEYOR
- POWER UNIT & HYDRAULICS
- TRACKS
- PLANT CONTROLS & OTHER
- OPTIONS
  - OPTIONS 2
- POWERSCREEN® PULSE
- DIMENSIONS

PLANT CONTROLS & OTHER

GUARDS

Wire mesh / sheet metal or GRP guards are provided for all drives, flywheels, pulleys & couplings.The guards provided are designed & manufactured to meet CE & ANSI standards.Hinged access guards are provided on the top, side & both ends of the engine.

UMBILICAL CONTROL

An umbilical control unit is also supplied as standard with the plant. Controls tracking function & has a stop button for the plant

PLATFORMS

Galvanised catwalks and ladders for full maintenance and service access.
Catwalks on left hand side of the machine with access to both sides of the powerunit.
Compact folding for transport - optional RHS platform.



PLANT CONTROLS

Advanced CANBUS compliant system Large display screen (IP67 Rated)

Five simple operating modes with menu driven graphic user interface:

- Track mode: For moving machine
- Manual mode: For manually starting machine
- Automatic mode: For automatically starting the machine in predetermined sequence
- Configuration mode: For testing/setting individual components
- Language selection: For setting languages

User friendly incremental selection of feeder and crusher speed to enable the operator to achieve the optimal throughput. Choice of preset parameters to suit crushing applications

- Hard Rock
- Soft Rock
- Demolition and Recycle

- Lockable compartment
- Emergency stops: x 6

RADIO REMOTE CONTROL

Complete with integrated tracking functions & plant stop button. Note - only available in certain countries where type approval has been obtained.



PREMIERTRAK 330

- OVERVIEW
- JAW CRUSHER
- HOPPER
- VIBRATING GRIZZLY FEEDER
- PRODUCT CONVEYOR
- POWER UNIT & HYDRAULICS
- TRACKS
- PLANT CONTROLS & OTHER
- OPTIONS
  - OPTIONS 2
- POWERSCREEN® PULSE
- DIMENSIONS

OPTIONS

BYPASS CONVEYOR

Conveyor type:	Troughed, modular with hydraulic raise & lower. Folds hydraulically for transport
Width:	650mm (26”)
Discharge height:	2.1m (6’ 10”)
Stockpile capacity:	12m³ (15.7 cu.yd.)
Position:	Discharge on RHS or LHS of plant

BELT WEIGHER

Type:	Modular scale with stainless load cells, single idler speed wheel & display unit
Accuracy:	+ 1.0 + 0.5% Rolescale design
Display:	Separate read out near control panel

When selected will automaticaly connect to Powerscreen Pulse

MAGNET

Options:	CP020 single pole (S.P.) TP020 twin pole (T.P.)
Belt width: **Centres**:	750mm (2’ 6”) 1700mm (5’ 7”)
Drive / Control:	Direct drive hydraulic motor, pre-set variable speed
Discharge:	RHS via stainless shedder plate
Weight:	S.P. 1000kg (2204lbs) T.P. 1500kg (3306lbs)





PREMIERTRAK 330

- OVERVIEW
- JAW CRUSHER
- HOPPER
- VIBRATING GRIZZLY FEEDER
- PRODUCT CONVEYOR
- POWER UNIT & HYDRAULICS
- TRACKS
- PLANT CONTROLS & OTHER
- OPTIONS
  - OPTIONS 2
- POWERSCREEN® PULSE
- DIMENSIONS

OPTIONS 2

FEEDER UNDER SCREEN MESH

Position: Optional aperture meshes fitted in lieu of the standard 30mm (1.2'') mesh.

Width: 910mm (3')
Length: 1280mm (4' 2")

CONTROL PANEL POSITIVE PRESSURISATION

An additional unit designed to reduce dust particles within the control panel. A continuous flow of clean air is passed through the cabinet whilst the unit simultaneously filters out any particulate laden air.

ELECTRIC WATER PUMP

An electrically powered water pump is available to power the dust suppression system.

UNDER CRUSHER DEFLECTOR PLATE

A hydraulic adjustable deflector plate, increases belt protection in recycling applications. Situated immediately below the crusher outlet point & is fitted with a 15mm thick wear resistant plate. Deflector plate working angle can be adjusted from the PLC control system.

HOT/COLD CLIMATE OILS

Cold climate oils - (Recommended for ambient temperatures between -20 to +30ºC) - Hydraulic & lubrication oils only. Other component modifications may be required for low temperature operations. Please contact the Powerscreen sales & applications department with any queries.

Hot climate oils - (Recommended for ambient temperatures between +15 to +50ºC)

OPTIONAL EXTRAS

- Hydraulic Folding Hopper
- Deflector plate under crusher
- Bypass conveyor
- Single pole overband magnetic separator
- Jaw level sensor
- Twin pole overband magnetic separator
- Belt weigher
- Electric water pump
- Stockpiler drive
- Stockpile level sensor
- Hydraulic Raise/Lower Product Conveyor
- Working lights
- Dust covers on discharge conveyor
- Rip stop belt
- Magnet hydraulic raise/lower
- Remote feeder control station



PREMIERTRAK 330

- OVERVIEW
- JAW CRUSHER
- HOPPER
- VIBRATING GRIZZLY FEEDER
- PRODUCT CONVEYOR
- POWER UNIT & HYDRAULICS
- TRACKS
- PLANT CONTROLS & OTHER
- OPTIONS
  - OPTIONS 2
- POWERSCREEN® PULSE
- DIMENSIONS

POWERSCREEN PULSE

RECORD, DISPLAY AND ANALYSE DATA:

HIGH EFFICIENCY THROUGH PRECISE INFORMATION

Available online anywhere and at any time: comprehensive information on the GPS location, start and stop times, fuel consumption, tonnages, cone settings, wear ratings, operating hours, maintenance status, and much more.



AVAILABLE ANYWHERE AND AT ANY TIME

DASHBOARD DISPLAY

FLEET OVERVIEW

WEEKLY REPORT DIRECT TO YOUR INBOX

GPS: MACHINE TRACKING

REPORTING
UTILISATION, PERFORMANCE & PART SPECIFIC





PREMIERTRAK 330

- OVERVIEW
- JAW CRUSHER
- HOPPER
- VIBRATING GRIZZLY FEEDER
- PRODUCT CONVEYOR
- POWER UNIT & HYDRAULICS
- TRACKS
- PLANT CONTROLS & OTHER
- OPTIONS
  - OPTIONS 2
- POWERSCREEN® PULSE
- DIMENSIONS

DIMENSIONS

Figure 1: Premiertrak 330
Working Position

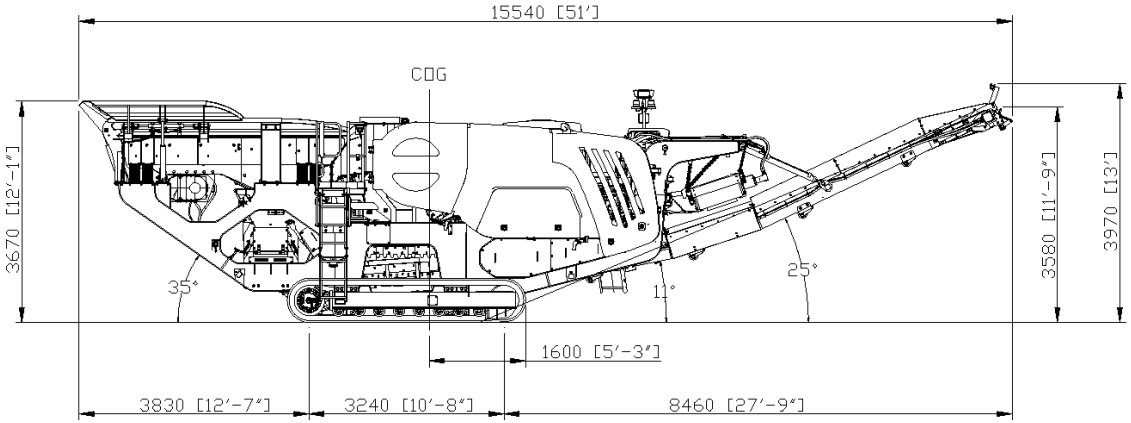

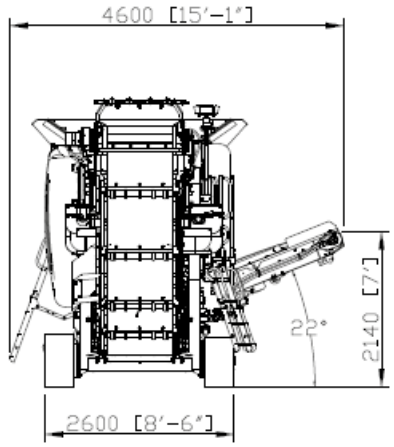

MORE DIMENSIONS OVERLEAF



- OVERVIEW
- JAW CRUSHER
- HOPPER
- VIBRATING GRIZZLY FEEDER
- PRODUCT CONVEYOR
- POWER UNIT & HYDRAULICS
- TRACKS
- PLANT CONTROLS & OTHER
- OPTIONS
  - OPTIONS 2
- POWERSCREEN® PULSE
- DIMENSIONS

DIMENSIONS

Figure 2: Premiertrak 330
Transport Position

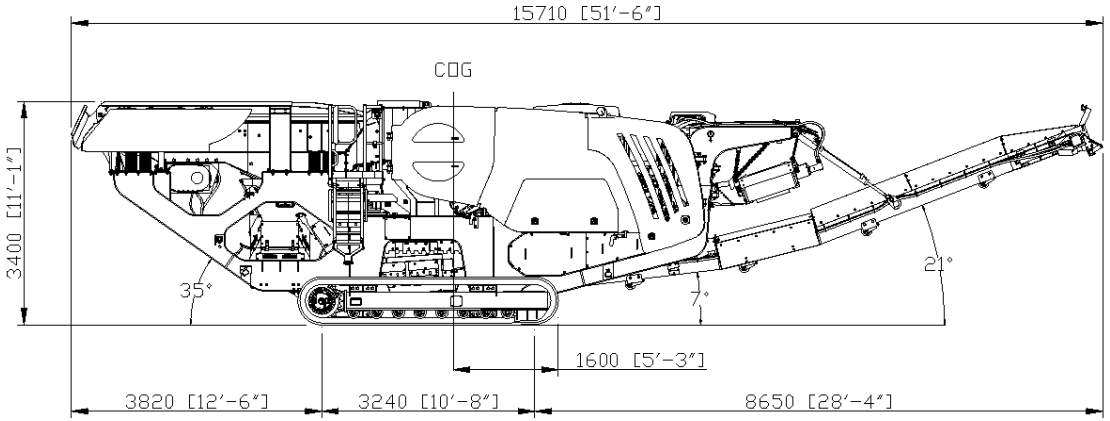

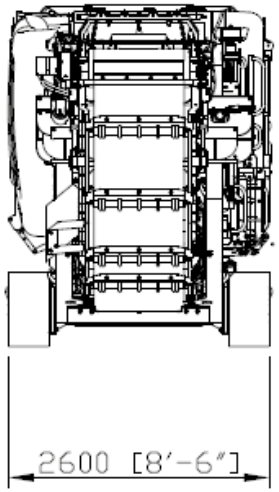

Powerscreen equipment complies with CE requirements.

Please consult Powerscreen if you have any other specific requirements in respect of guarding, noise or vibration levels, dust emissions, or any other factors relevant to health and safety measures or environmental protection needs. On receipt of specific requests, we will endeavour to ascertain the need for additional equipment and, if appropriate, quote extra to contract prices.

All reasonable steps have been taken to ensure the accuracy of this publication, however due to a policy of continual product development we reserve the right to change specifications without notice.

It is the importers' responsibility to check that all equipment supplied complies with local legislation regulatory requirements.

Plant performance figures given in this brochure are for illustration purposes only and will vary depending upon various factors, including feed material gradings and characteristics. Information relating to capacity or performance contained within this publication is not intended to be, nor will be, legally binding.

GET IN TOUCH

Dungannon
200 Coalisland Road, Dungannon,
Co Tyrone, BT71 4DR, Northern Ireland
Tel: +44 (0) 28 87 718 500
Fax: +44 (0) 28 87 747 231

Louisville
11001 Electron Drive,
Louisville, Kentucky, 40299 USA
Tel: +1 502 736 5200
Fax: +1 502 736 5202

www.powerscreen.com