POWERSCREEN®
PREMIERTRAK 760

JAW CRUSHER

GET STARTED



TECHNICAL SPECIFICATION - REV 0 01/01/2021

To use my interactive features I need to be opened in 'Adobe Acrobat Reader' click here to download



PREMIERTRAK 760

- OVERVIEW
- JAW CRUSHER
- HOPPER
- PRE-SCREEN
- PRODUCT CONVEYOR
- POWER UNIT & HYDRAULICS
- TRACKS
- PLANT CONTROLS & OTHER
- OPTIONS
- POWERSCREEN® PULSE
- DIMENSIONS

OVERVIEW

SPECIFICATION

Total Weight		79,450kg (175,157lbs) - without bypass conveyor and twin pole magnet 83,450kg (183,976lbs) - with bypass conveyor and twin pole magnet
Transport	**Length**	18.1m (59' 4")
	Height	3.86m (12' 8")
	Width	3.3m (10' 10")
Working	**Length**	20.74m (68' 7")
	Height	5.12m (16' 11")
	Width	6.38m (21' 1") with bypass conveyor
Crusher Type:		Single toggle jaw, feed opening 1415mm x 820mm (55"x 32")
Power Unit		CAT C13 328kW (440hp), or Scania DC13 331kW (450hp)
Plant Colour		RAL 5021, RAL 7024, RAL 9005

FEATURES & BENEFITS

The Powerscreen® Premiertrak 760 jaw crusher incorporates the Terex Jaques JW55 single toggle jaw which boasts a throughput capacity of 750tph (827 US tph) depending on application and material. The Premiertrak 760 has a hydrostatic crusher drive which means the chamber can be run in reverse for clearing blockages or in certain recycling applications.

The large 10m³ hopper has hydraulically folding sides and a wedge clamp system ensuring faster set up times. The Premiertrak 760 also features a vibrating pan feeder linked to an aggressive independent pre-screen which provides essential removal of fines material before it reaches the chamber.

- Output potential of up to 750tph / 827 US tph - depending on material type and crusher settings
- Terex® Jaques jaw chamber with hydraulic CSS adjustment.
- Hydrostatic drive with an advanced electronic control system.
- 10m³ hopper capacity. Additional capacity available with the optional side extensions.
- Optional bypass conveyor available or material can run under the jaw to the product conveyor.

APPLICATIONS

Aggregate
Sand & gravel
Blasted rock
River rock

Recycling
C&D waste
Overburden
Foundry waste

Mining
Processed ores
Processed minerals



PREMIERTRAK 760

- OVERVIEW
- JAW CRUSHER
- HOPPER
- PRE-SCREEN
- PRODUCT CONVEYOR
- POWER UNIT & HYDRAULICS
- TRACKS
- PLANT CONTROLS & OTHER
- OPTIONS
- POWERSCREEN® PULSE
- DIMENSIONS

JAW CRUSHER

Crusher type:	Terex JW55 chamber - single toggle jaw
Feed opening:	1415mm x 820mm (55” x 32”)
Under Jaw Clearance:	380mm nominal (1’ 3’’)
Lubrication:	Grease
Drive:	Hydrostatic
Max CSS:	225mm (9’’)
Min CSS:	75 mm (3”) - demolition & recycling
	85mm (3 1/4”) - quarry

Reverse action for clearing blockages - also adventageous in recycling applications.
Full hydraulic closed side setting adjust.
S-Tooth (18% Manganese) fitted as standard.

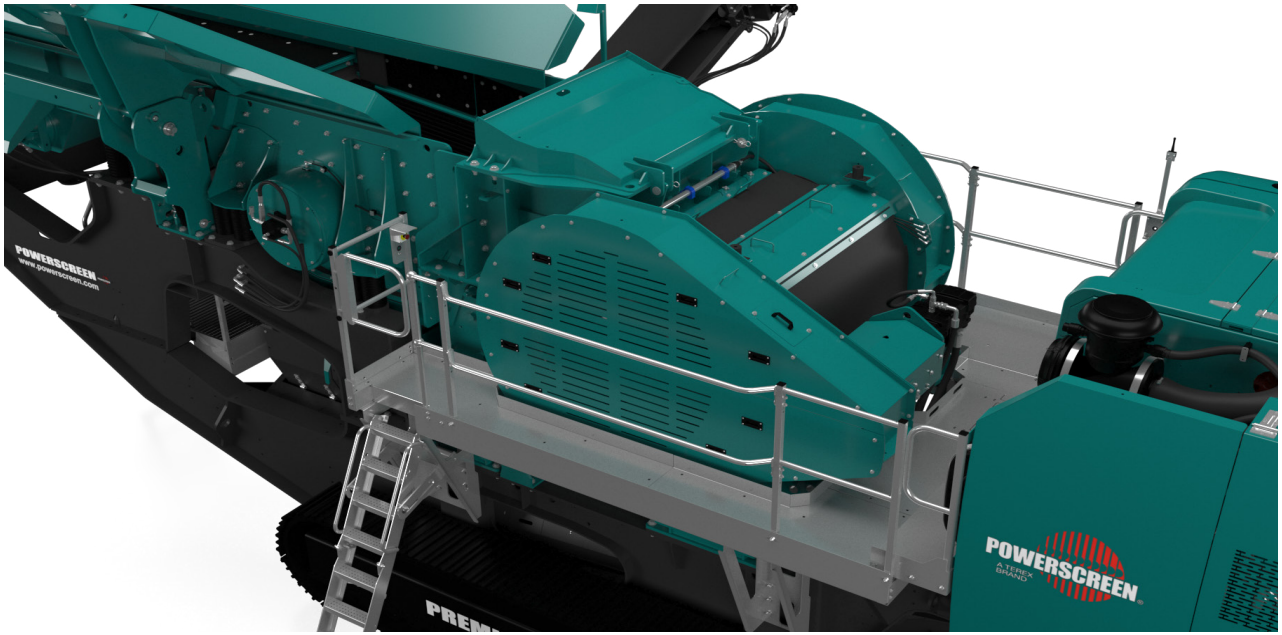



PREMIERTRAK 760

- OVERVIEW
- JAW CRUSHER
- HOPPER
- PRE-SCREEN
- PRODUCT CONVEYOR
- POWER UNIT & HYDRAULICS
- TRACKS
- PLANT CONTROLS & OTHER
- OPTIONS
- POWERSCREEN® PULSE
- DIMENSIONS

HOPPER

Feed height: 4.67m (15’ 5”)
Hopper capacity: Standard 10m³ (13 cu. yd.)
Hopper capacity (extensions): 12m³ (15.6 cu. yd.)
Feed width rear: 2.86m (9’ 5”)
Feed width rear (extensions): 3.76m (12’ 5”)
Hopper body: 15mm thick wear resistant steel plate
Hydraulic locking mechanism.

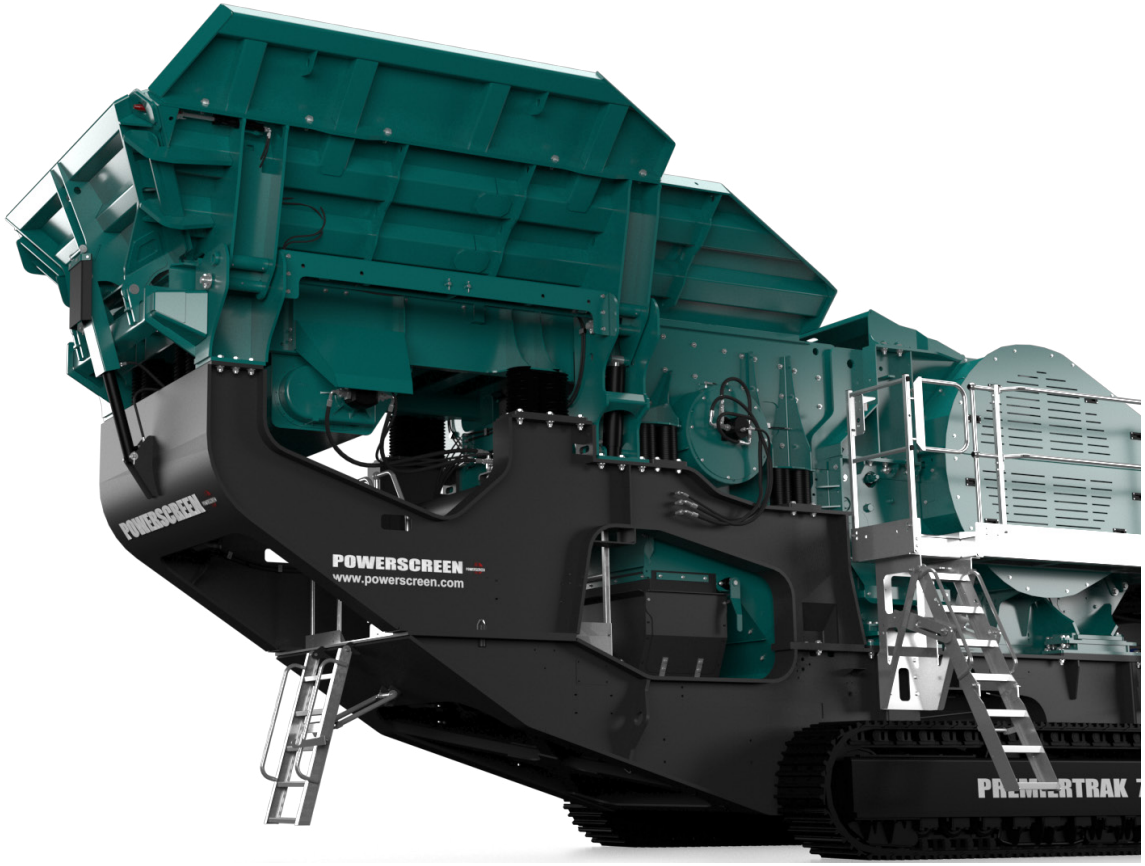



PREMIERTRAK 760

- OVERVIEW
- JAW CRUSHER
- HOPPER
- PRE-SCREEN
- PRODUCT CONVEYOR
- POWER UNIT & HYDRAULICS
- TRACKS
- PLANT CONTROLS & OTHER
- OPTIONS
- POWERSCREEN® PULSE
- DIMENSIONS

PRE-SCREEN

Length:	2.3m (7’ 6”)
Width:	1.36m (4’ 6”)
Grizzly:	75mm (standard), 100mm & 125mm (optional)
Underscreen:	38mm as standard (other apertures available)
Speed:	Variable: 450 - 900rpm

Note: Supplied with an independent pre-screen as standard

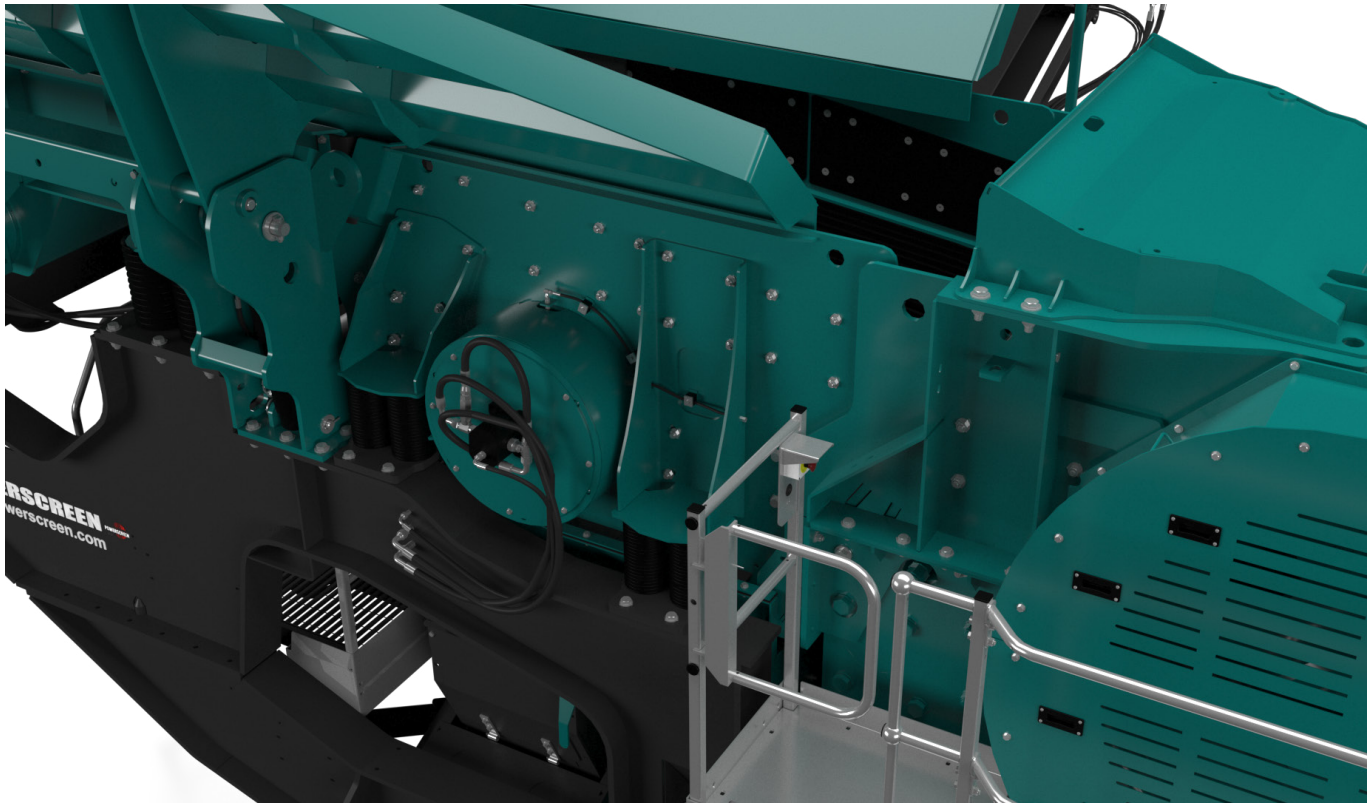



PREMIERTRAK 760

- OVERVIEW
- JAW CRUSHER
- HOPPER
- PRE-SCREEN
- PRODUCT CONVEYOR
- POWER UNIT & HYDRAULICS
- TRACKS
- PLANT CONTROLS & OTHER
- OPTIONS
- POWERSCREEN® PULSE
- DIMENSIONS

PRODUCT CONVEYOR

Belt type: Plain
Belt width: 1400mm (55")
Discharge height: 4.5m (14' 9")
Stockpile volume: 136m³ (177 cu. yd.)
Angle: 21°

Hydraulic raise / lower of product conveyor and head section for service access and maintenance.

Impact bars and wear resistant liners at feed point.

High spec scraper at head drum.

DUST SUPPRESSION SYSTEM

Sprays bars with atomiser nozzles mounted over crusher mouth, product conveyor feed & discharge points. Piped to an inlet manifold for client's pressured water supply.

Type: Clean water multi atomising nozzles
Inlet: Single filtered inlet point on chassis
Pressure: 2.8 bar (42 psi)
Frost protection: Via system drain valves
Pump: Optional extra





PREMIERTRAK 760

- OVERVIEW
- JAW CRUSHER
- HOPPER
- PRE-SCREEN
- PRODUCT CONVEYOR
- POWER UNIT & HYDRAULICS
- TRACKS
- PLANT CONTROLS & OTHER
- OPTIONS
- POWERSCREEN® PULSE
- DIMENSIONS

POWER UNIT & HYDRAULICS

Tier 3 / Stage III Equivalent:	CAT C13	**Stage V**:	Scania DC13
Engine Power:	328kW (440hp)	**Engine Power**:	331kW (450hp)
Engine Speed:	1800rpm	**Engine Speed**:	1800rpm
Tier 4F / Stage IV:	Scania DC13	**Hydraulic Tank Capacity**:	900L (237 US GAL)
Engine Power:	331kW (450hp)	**Fuel Tank Capacity**:	1000L (263 US GAL)
Engine Speed:	1800rpm		





PREMIERTRAK 760

- OVERVIEW
- JAW CRUSHER
- HOPPER
- PRE-SCREEN
- PRODUCT CONVEYOR
- POWER UNIT & HYDRAULICS
- TRACKS
- PLANT CONTROLS & OTHER
- OPTIONS
- POWERSCREEN® PULSE
- DIMENSIONS

TRACKS

Type: Heavy duty tracks
Sprocket centres: 4.2mm (13' 9'')
Track width: 500 mm (1' 8")
Gradeability: 25˚ maximum
High Speed: 1kph (0.62mph)
Drive: Hydraulic motors
Tensioning: Hydraulic adjuster, grease tensioned
Dual speed tracking with 'soft start'

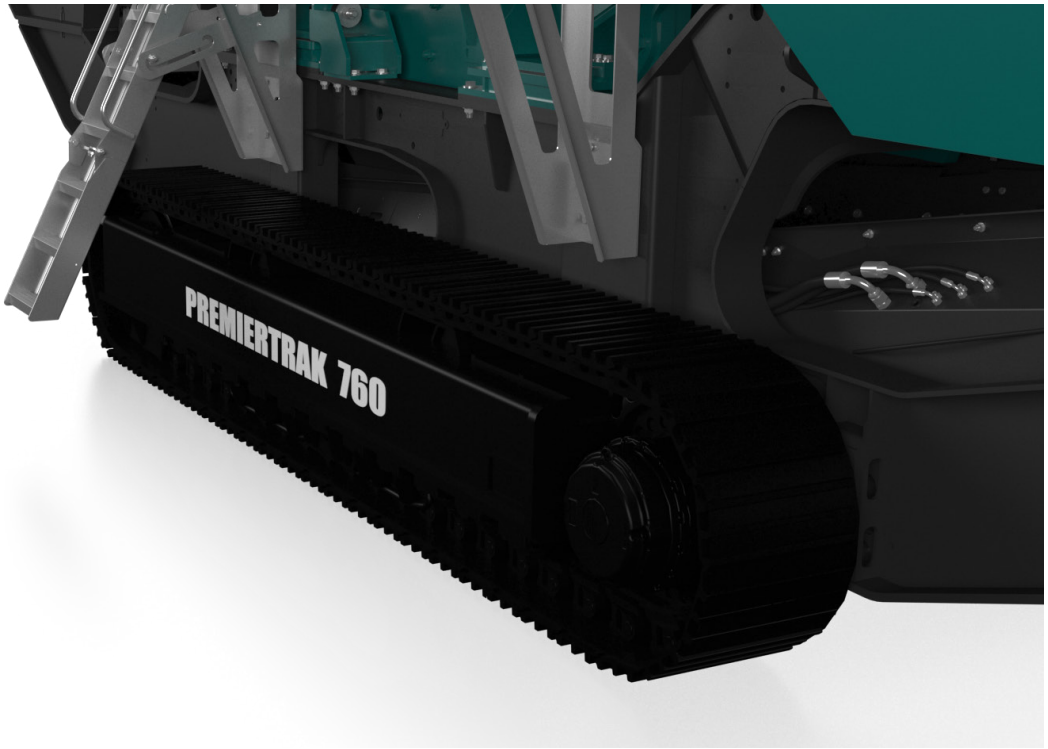



PREMIERTRAK 760

- OVERVIEW
- JAW CRUSHER
- HOPPER
- PRE-SCREEN
- PRODUCT CONVEYOR
- POWER UNIT & HYDRAULICS
- TRACKS
- PLANT CONTROLS & OTHER
- OPTIONS
- POWERSCREEN® PULSE
- DIMENSIONS

PLANT CONTROLS & OTHER

PLANT CONTROLS

Advanced CANBUS compliant system large display screen (IP67 Rated). Five simple operating modes with menu driven graphic user interface:

- Track mode: for moving machine.
- Manual mode: for manually starting the machine
- Automatic mode: for automatically starting the machine in prede termined sequence.
- Language selection: for setting languages
- Configuration mode: for testing / setting individual components.

Choice of pre-set parameters to suit crushing applications:

- Hard rock
-Soft rock
-Demolition and Recycling

User friendly incremental selection of feeder and crusher speed enables the operator to achieve the optimal throughput.

Detachable umbilical cord for tracking.

Optional radio remote control.

Integrated machine and engine control panel.

Lockable compartment.

Auto regulating feeder selectable for improved throughput control.

Emergency stops x 6

TOOLBOX

Mounted lockable toolbox.

Tool kit, flogging spanners, grease gun & manuals included.

CHUTES

Heavy duty inlet chute with bolt-up construction and liner plates.

Bypass chute with seletable discharge flop gate, to either the bypass conveyor or product conveyor.

PLATFORMS

Catwalk access on both sides and to the rear of the machine with access to both sides of the powerunit.
Compact folding for transport.





PREMIERTRAK 760

- OVERVIEW
- JAW CRUSHER
- HOPPER
- PRE-SCREEN
- PRODUCT CONVEYOR
- POWER UNIT & HYDRAULICS
- TRACKS
- PLANT CONTROLS & OTHER
- OPTIONS
- POWERSCREEN® PULSE
- DIMENSIONS

OPTIONS

BYPASS CONVEYOR

Belt width: 750mm (30")
Discharge height: 3.6m (11' 10'')
Stockpile volume: 69.4m³ (90.8 cu.yd.)
Drive: Direct drive hydraulic motor
Working Angle: 30°

Hydraulically folds for transport.

REMOTE CONTROL UNIT (OPTIONAL)

Full function radio remote unit.

Machine can be switched from crushing mode into tracking mode, moved, and then switched back into crushing mode.

Feeder stop / start.

CONTROL PANEL POSITIVE PRESSURISATION

An additional unit designed to reduce dust particles within the control panel. A continuous flow of clean air is passed through the cabinet whilst the unit simultaneously filters out any particulate laden air.

HOT/COLD CLIMATE OILS

Cold climate oils - (recommended for ambient temperatures between -20 to +30°C) - Hydraulic & lubrication oils only. Other component modifications may be required for low temperature operations. Please contact the Powerscreen sales & applications department with any queries

Hot climate oils - (recommended for ambient temperatures between +15 to +50°C)

MAGNET

Options: Sngle pole (S.P.)
Twin pole (T.P.)

Belt width: 750mm (2' 6")
Centres: 1700mm (5' 7")

BELT WEIGHER

Type: Roller scale & display unit
Accuracy: + 1.0 + 0.5%
Display: Separate read out near control panel

OTHER OPTIONS

- Hopper extensions
- Optional spacing on Pre-screen
- Main conveyor dust cover
- Water pump



PREMIERTRAK 760

- OVERVIEW
- JAW CRUSHER
- HOPPER
- PRE-SCREEN
- PRODUCT CONVEYOR
- POWER UNIT & HYDRAULICS
- TRACKS
- PLANT CONTROLS & OTHER
- OPTIONS
- POWERSCREEN® PULSE
- DIMENSIONS

POWERSCREEN PULSE

RECORD, DISPLAY AND ANALYSE DATA:

HIGH EFFICIENCY THROUGH PRECISE INFORMATION

Available online anywhere and at any time: comprehensive information on the GPS location, start and stop times, fuel consumption, tonnages, cone settings, wear ratings, operating hours, maintenance status, and much more.



AVAILABLE ANYWHERE AND AT ANY TIME

DASHBOARD DISPLAY

FLEET OVERVIEW

WEEKLY REPORT DIRECT TO YOUR INBOX

GPS: MACHINE TRACKING

REPORTING
UTILISATION, PERFORMANCE & PART SPECIFIC





PREMIERTRAK 760

- OVERVIEW
- JAW CRUSHER
- HOPPER
- PRE-SCREEN
- PRODUCT CONVEYOR
- POWER UNIT & HYDRAULICS
- TRACKS
- PLANT CONTROLS & OTHER
- OPTIONS
- POWERSCREEN® PULSE
- DIMENSIONS

DIMENSIONS

Figure 1: Premiertrak 760
Working Position

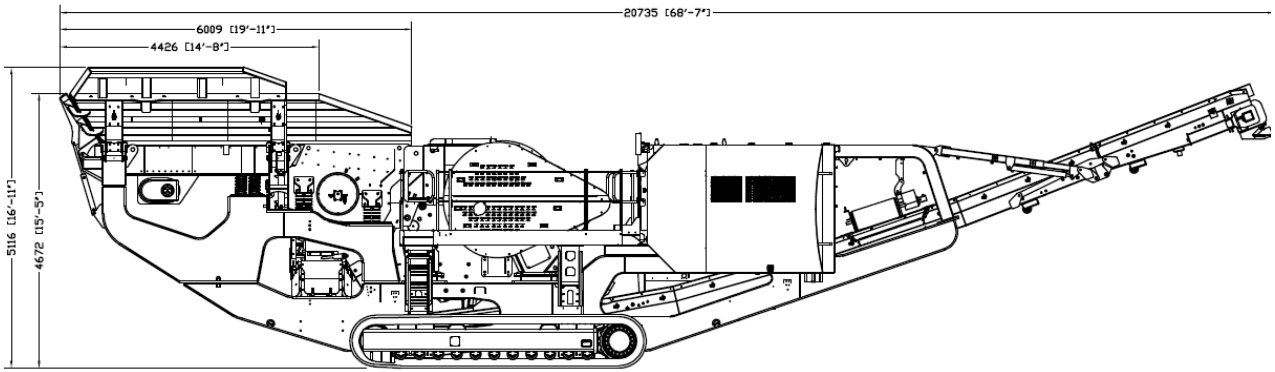

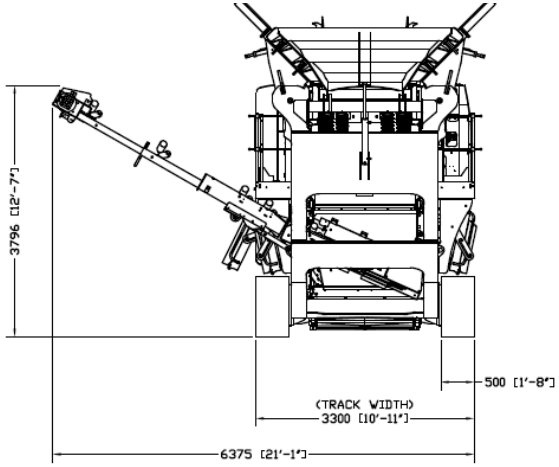

MORE DIMENSIONS OVERLEAF



PREMIERTRAK 760

- OVERVIEW
- JAW CRUSHER
- HOPPER
- PRE-SCREEN
- PRODUCT CONVEYOR
- POWER UNIT & HYDRAULICS
- TRACKS
- PLANT CONTROLS & OTHER
- OPTIONS
- POWERSCREEN® PULSE
- DIMENSIONS

DIMENSIONS

Figure 2: Premiertrak 760
Transport Position

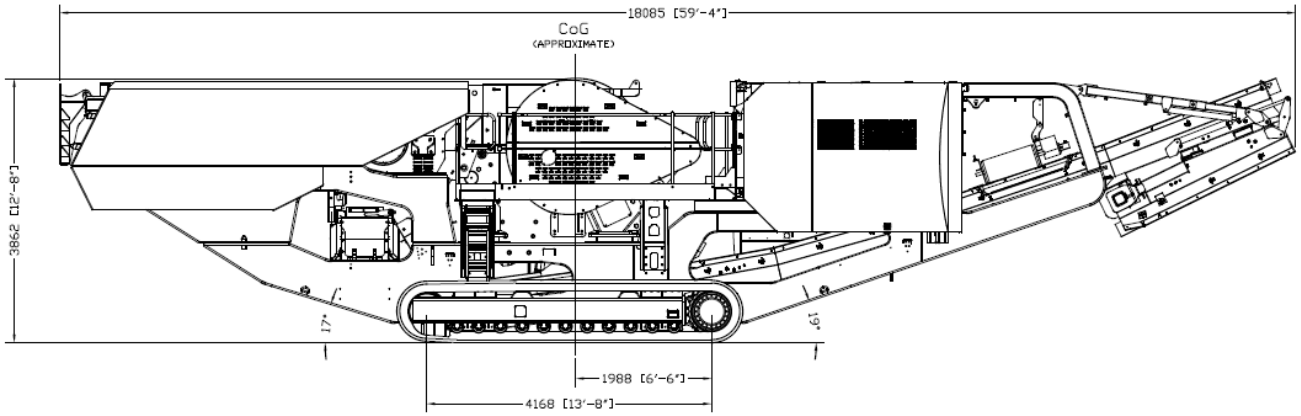

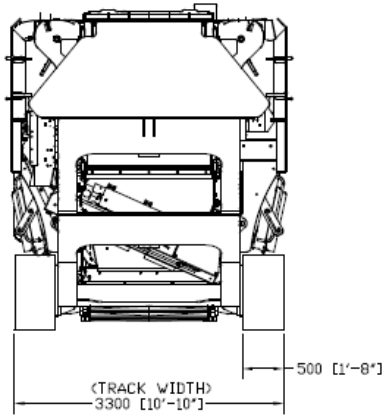

Powerscreen equipment complies with CE requirements.

Please consult Powerscreen if you have any other specific requirements in respect of guarding, noise or vibration levels, dust emissions, or any other factors relevant to health and safety measures or environmental protection needs. On receipt of specific requests, we will endeavour to ascertain the need for additional equipment and, if appropriate, quote extra to contract prices.

All reasonable steps have been taken to ensure the accuracy of this publication, however due to a policy of continual product development we reserve the right to change specifications without notice.

It is the importers' responsibility to check that all equipment supplied complies with local legislation regulatory requirements.

Plant performance figures given in this brochure are for illustration purposes only and will vary depending upon various factors, including feed material gradings and characteristics. Information relating to capacity or performance contained within this publication is not intended to be, nor will be, legally binding.

GET IN TOUCH

Dungannon
200 Coalisland Road, Dungannon,
Co Tyrone, BT71 4DR, Northern Ireland
Tel: +44 (0) 28 87 718 500
Fax: +44 (0) 28 87 747 231

Louisville
11001 Electron Drive,
Louisville, Kentucky, 40299 USA
Tel: +1 502 736 5200
Fax: +1 502 736 5202

www.powerscreen.com