DEVELON

Wheel Loader

DL480-7



Engine

Make	Scania
Model	DC13
Number of cylinders	6
Rated power, gross (hp per SAE J1995)	344.6 hp (257.0 kW) @ 1800 rpm
Rated power, net (hp per SAE J1349)	344.6 hp (257.0 kW) @ 1800 rpm
Max. torque, gross (SAE J1995)	1180.0 lbf·ft. (163.0 kgf) @ 1300 rpm
Displacement	775.0 in.^{3} (12.7 L)
Bore and stroke	5.1" x 6.3" (130 mm x 160 mm)
Starter	24 V, 8.6 hp (6.0 kW)
Battery	2 x 12 V, 200 AH, 1300 CCA
Alternator	28 V, 100 A
Air cleaner	Double elements

Hydraulics

Main pumps	Variable displacement axial piston pump 97.2 gpm (368.0 L/min.)
System pressure (work)	4641.0 psi (320.0 bar)
System pressure (steer)	3046.0 psi (210.0 bar)
Boom speed – up	6.1 sec
Boom speed – down	2.7 sec
Bucket speed – crowd	2.3 sec
Bucket speed – dump	1.7 sec

Travel Speeds

Travel speed – forward (4-speed)	3.7 / 7.1 / 15.5 / 22.5 mph (6.0 / 11.5 / 24.9 / 36.2 km/h)
Travel speed – forward (5-speed) (US50 and US51 packages only)	3.9 / 7.3 / 11.4 / 16.5 / 24.9 mph (6.2 / 11.7 / 18.4 / 26.5 / 40.0 km/h)
Travel speed – reverse (4-speed)	3.7 / 7.1 / 15.5 mph (6.0 / 11.5 / 24.9 km/h)
Travel speed – reverse (5-speed) (US50 and US51 packages only)	3.9 / 7.3 / 16.5 mph (6.2 / 11.7 / 26.5 km/h)
Max. grade	51% (27°)

Environment

Sound level (ISO 6395)	106 dB(A)
Cabin sound level (ISO 6396)	72 dB(A)

Refill Capacities

Fuel tank	87.7 gal. (332.0 L)
DEF tank	15.9 gal. (60.0 L)
Cooling system (radiator capacity)	13.1 gal. (52.0 L)
Engine oil	11.9 gal. (45.0 L)
Transmission	15.9 gal. (60.0 L)
Front axle	16.4 gal. (62.0 L)
Rear axles	11.1 gal. (42.0 L)
Hydraulic system	59.7 gal. (226.0 L)

All capacities are approximate values. Always refer to the machine's OM for exact refill levels. Check the dipstick, level eye, level plug, etc., to achieve the correct level.

Hydraulic Cylinders

Steering (2) bore x rod diameter x stroke	3.9" x 2" x 17.7" (100 mm x 50 mm x 450 mm)
Lift arm (2) bore x rod diameter x stroke	6.7" x 4.1" x 31.1" (170 mm x 105 mm x 789 mm)
Bucket (1) bore x rod diameter x stroke	7.5" x 4.7" x 23.2" (190 mm x 120 mm x 590 mm)

The piston rods and cylinder bodies are made of high-strength steel. A shock-absorbing mechanism is fitted in at the base and rod end of the lift and bucket cylinders and the rod end of the steering cylinders to ensure shock-free operation and extended piston life.

NOTE: Where applicable, dimensions are in accordance with Society of Automotive Engineers (SAE) and ISO standards. Specifications and design are subject to change without notice. All dimensions are given for DEVELON wheel loaders equipped with standard tires. Pictures of DEVELON wheel loaders may show other than standard equipment. All dimensions are shown in inches. Respective metric dimensions are enclosed by parentheses. Rounding may impact specifications DEVELON construction equipment is manufactured with a Quality Management System that is in compliance with ISO 9001:2008.

Dimensions

		Standard Arm	High-Lift
Bucket capacity, heaped ISO/SAE		6.3 yd³ (4.8 m³)	
Bucket width	A	10' 9.9" (3300 mm)	
Max. hinge pin height	B	14' 9.2" (4500 mm)	16' 4.3" (4985 mm)
Dump height (45°) – fully raised	C	10' 7.6" (3240 mm)	12' 2.6" (3725 mm)
Dump reach (45°) – fully raised	D	4' 2.0" (1275 mm)	4' 10.3" (1480 mm)
Digging depth	E	4.0" (102 mm)	6.0" (168 mm)
Overall height, ROPS cabin	F	11' 11.0" (3635 mm)	
Overall length	G	29' 10.6" (9110 mm)	31' 10.5" (9715 mm)
Wheel base	H	11' 7.8" (3550 mm)	
Tread width	I	7' 6.6" (2300 mm)	
Ground clearance	J	1' 6.0" (455 mm)	
Max. tilt angle on ground*		45°	46°
Max. tilt angle at carry position	K	49°	53°
Max. tilt angle at fully raised	L	66°	62°
Max. dump angle at fully raised	M	46°	
Max. steering angle	N	40°	
External turning radius, bucket edge	O	23' 5.9" (7160 mm)	24' 5.3" (7450 mm)
External turning radius, outside tire	P	21' 0.1" (6420 mm)	
Tire size		26.5R25 L3	
Operating weight		58354 lb. (26469 kg)	58938 lb. (26734 kg)
Static tipping load (straight)		45322 lb. (20558 kg)	35005 lb. (15878 kg)
Static tipping load (at full turn)		40021 lb. (18153 kg)	30904 lb. (14018 kg)
Breakout force		51931 lbf. (231.0 kN)	49683 lbf. (221.0 kN)

*Not shown on diagram

Front Lift Arm Configuration
Standard: US10, US11, US50, US51
High-Lift: US20, US21

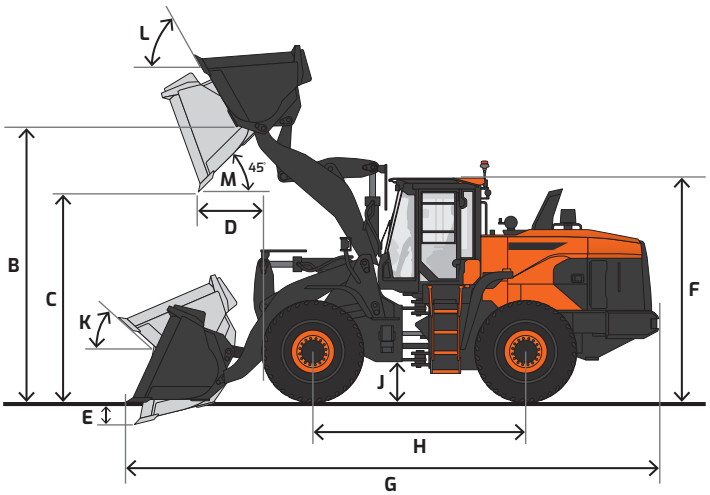

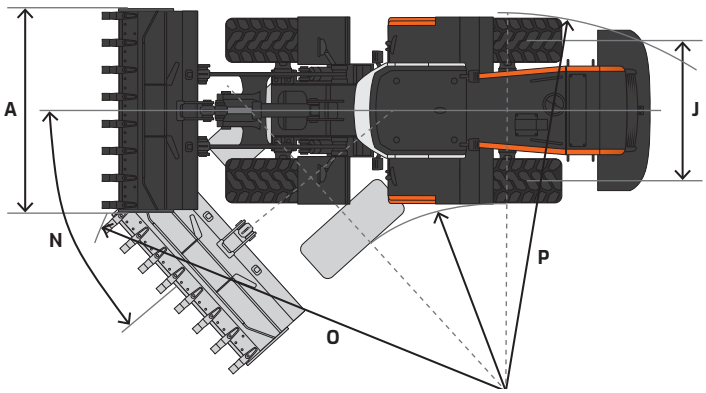

Standard & Optional Equipment | Standard Base Package, US10

■ Standard ● Optional

Engine

Emissions (EPA), T4f	■
High-pressure common-rail (HPCR)	■
Turbo, variable geometry (VGT)	■
Cooled exhaust gas recirculation (CEGR)	■
Diesel oxidation catalyst (DOC)	■
Selective catalytic reduction (SCR)	■
Diesel exhaust fluid (DEF)	■
Fuel filter with water separator	■
Coolant recovery tank	■
Dual element dry-type air filter with evacuator	■
Precleaner	■
Electronic engine control (ECU)	■
Auto idle (working to standby)	■
Auto shutdown (time adjustable)	■
Overheat & low oil pressure engine protection	■
Cooling fan – radiator, variable speed	■
Cooling fan – radiator, automatic reversible	■
Remote drain port – engine oil	■
Block heater (110 V)	■

Hydraulic

Variable displacement axial piston pump	■
Closed-center system	■
Main control valves, pilot	■
Remote test ports	■
Remote drain port, hydraulic oil	■
Auxiliary hydraulics (3rd valve)	■
Automatic boom/lift kick-out, adjustable (in cab)	■
Automatic return-to-dig position, adjustable	■
Boom float	■
Ride control	■

Electrical

System voltage – 24 V	■
Alternator – 28 V, 100 A	■
2 x 12 V batteries, 200 AH reserve capacity, 1300 CCA	■
Blade-type fuse panel	■
Main circuit breaker	■
Lights, work (LED): front (2), rear (2)	■
Lights, work (LED): front (4), rear (4)	●
Lights, work (LED): front (6), rear (6)	●
Lights, headlights: hi/lo beams (2)	■
Lights, stop, tail & direction indicators	■
Horn	■
Rotating beacon	■
Hour meter	■
Engine restart prevention system	■
Rearview camera	■
Laptop service port	■
Self-diagnostics system	■

Cabin

Steel, all-weather & sound-suppressed	■
ROPS (ISO 3471)	■
FOPS (ISO 3449)	■
Front window with wiper/washer	■
Rear window with wiper	■
Tinted safety glass	■
Visor, retractable	■
Adjustable sliding side door window	■
Defrost, front window	■
Lockable doors	■
Seat - Air-suspension - 3" (76 mm) seat belt - Adjustable height & recline - Adjustable fore/aft - Adjustable armrests	■
Control stands - Height adjustable - Fore/aft adjustable	■
Storage for operator's manuals	■
Mirror, interior rearview (1)	■
Mirrors, exterior (2), heated	■
Mirrors, exterior (2), heated (electronic adjustable)	●
Fully automatic HVAC with ambient temperature sensor	■
Smart Touch display - 8" touch-enabled - Adjustable height & angle	■
Transparent Bucket - Multi-camera system & controller - In-cab display	■
AM/FM stereo with Bluetooth®	■
Speakers (2)	■
Antenna, roof-mounted	■
Emergency breakout tool	■
Power socket, 12 V	■
Power socket, USB	■
Cup holder	■
Interior light	■
Coat hanger	■

Controls

Adjustable steering column - Tilting - Telescoping	■
Emergency secondary steering	●
Throttle pedal (accelerator)	■
Brake pedal, right	■
Brake pedal, left	■
Brake pedal transmission kick-out	■
Gear selector (FNR)	■
Joystick control	■
Fingertip control (3-lever)	●
Switches, console-mounted - Starter (button) - Parking brake - Pilot cutoff - Transmission cutoff - Work light - Reversible cooling fan	■
Emergency stop switch	■
Power mode (P, S, E)	■
Transmission mode (manual / auto 1–4 / auto 2–4)	■
Wiper control panel	■
Audio control panel	■

Display Monitor & Warnings

Buzzer - Engine oil pressure - Coolant temperature - Transmission overheat	■
Gauges - Fuel level - DEF level - Engine coolant temperature - Transmission oil temperature - Engine rpm - Speedometer - Transmission gear indicator - Battery voltage - ECO - Smart guidance system - Digital clock - Trip meter - Hour meter - Total operation time - Fuel consumption	■
Warning & indicator lights - Seat belt - Error code - SCR warning - Check engine - Engine oil pressure - Engine pre-heat engaged - Radiator coolant level & temperature - Air filter - Fuel level - DEF level – low - Water in fuel - Battery charge - Direction signal - Lights (high, main, work, beacon) - Emergency steering - Hydraulic oil temperature - Hydraulic charge pressure warning - Hydraulic pilot filter - Hydraulic return filter - Transmission mode - Transmission warning - Transmission lock-up - Transmission oil temp - Transmission gear indicator - Brake fluid pressure warning - Reverse fan indicator - Mirror heat indicator - Parking brake indicator	■
Back-up alarm	■
Situation Awareness Technology (SAT)	■
Scale system, integrated smart scale	●
Around view monitor (AVM)	●

Frame & Driveline

Z-bar lift arm	■
Z-bar lift arm, high-lift	●
Steering cylinders, double-acting (2)	■
Transmission – 4F/3R speed - Full automatic – power shift - Torque converter	■
Transmission – 5F/3R speed - Automatic – power shift - Torque converter lock-up clutch	●
Differentials - Limited slip front/rear	■
Differentials - Hydraulic locking front - Open rear	●
Hydraulic power steering	■
Outboard planetary axles	■
Fixed front axle	■
Oscillating rear axle	■
Spring-applied hydraulic release brake	■
Sealed, self-adjusting brakes	■
Tires, 26.5R25 L3 radial	■
Outboard brakes	■

Other

Centralized lubrication	■
Air-compressor	●
Handrails, entrance & service steps	■
Handrails, roof-mounted	■
Skid-resistant entrance steps	■
Skid-resistant service platforms	■
Drawbar & pin	■
Wheel chocks	■
Rear fender, full	●
Additional counterweight*	●
Manuals - Operation & Maintenance - AEM Safety Manual	■
MY DEVELON (telematics)	■
Vandalism protection - Lockable panels - Lockable fluid fill points - Anti-theft protection (password)	■

*Standard on high-lift models

Certain specification(s) are based on engineering calculations and are not actual measurements. Specification(s) are provided for comparison purposes only and are subject to change without notice. Specification(s) for your individual DEVELON equipment will vary based on normal variations in design, manufacturing, operating conditions, and other factors. Pictures of DEVELON units may show other than standard equipment.

Powered by **Innovation**

na.develon-ce.com/dl480-7

DEVELON

DL480-7 Wheel Loader Spec Sheet
Printed in the U.S.A.
25903_007_D082126

A brand of HD Hyundai Infracore.

©2026 HD Hyundai Infracore. All rights reserved.