DEVELON

Compact Track Loader

DTL26



Engine

Make	DEVELON
Model	D24
Emissions certification	EPA Tier 4 final
Number of cylinders	4
Rated power, gross (hp per SAE J1995)	72.7 hp (54.2 kW) @ 2600 rpm
Rated power, net (hp per SAE J1349)	71.7 hp (53.5 kW) @ 2600 rpm
Maximum torque, gross (SAE J1995)	206.5 lbf·ft. (28.6 kfg·m) @ 1600 rpm
Displacement	146 $in.^3$ (2.4 L)
Bore and stroke	3.54 in. x 3.70 in. (90 mm x 94 mm)
Starter	12 V, 4.4 hp (3.3 kW)
Battery	12 V, 100 AH
Asperation	Turbocharged
Alternator	12 V, 90 amp
Air cleaner	Powercore
Aftertreatment	DOC only

Hydraulics

Main pump (STD) (US20/US31)	24.0 gpm (91.0 L/min.) @ 2600 rpm
Main pump (high) (US31)	30.9 gpm (117.0 L/min.) @ 2600 rpm
Pressure (STD) (US20/US31)	3495.4 psi (24100 kPa)
Pressure (high) (US31)	4061.1 psi (28000 kPa)

Loader Performance

Operating weight	US20 – 9914 lb. (4497 kg) US31 – 10176 lb. (4616 kg)
Rated operating capacity (35% of tipping load)	US20 – 2594 lb. (1176 kg) US31 – 2751 lb. (1248 kg)
Tipping load	US20 – 7411 lb. (3361 kg) US31 – 7861 lb. (3566 kg)
Bucket breakout force	6291.9 lbf. (2854 kgf)
Lift arm breakout force	5903.9 lbf. (2678 kgf)
Dump height	89.9 in. (2678 mm)
Dump reach	43.8 in. (1114 mm)
Lift arm path	Vertical

Undercarriage

Lower rollers (each track)	4, triple flange
Front idler	Double (US20), triple (US31)
Rear idler	Single (US20), triple (US31)
Track width	12.6 in. (320 mm), 15.7 in. (400 mm)
Ground pressure	12.6-in. track – 6.5 psi (0.45 bar) 15.6-in. track – 5.2 psi (0.36 bar)

Drive System

Travel speed (low – high)	5.9 – 8.7 mph (9.5 – 14.0 km/h)
Max. traction force (drawbar pull)	10228.8 lbf. (45.5 kN)

Environment

Sound level (2000/14/EC)	100.6 dB(A)
Cabin sound level (ISO 6396)	75 dB(A)

Refill Capacities

Fuel tank	24.3 gal. (92.0 L)
Cooling system (radiator capacity)	2.6 gal. (10.0 L)
Engine oil	3.9 gal. (14.6 L)
Hydraulic tank	7.0 gal. (26.5 L)
Hydraulic system	12.5 gal. (47.2 L)

Hydraulic Cylinders

Lift arm (2) bore x rod diameter x stroke	2.8 in. x 2.0 in. x 36.7 in. (70 mm x 50 mm x 932 mm)
Bucket (2) bore x rod diameter x stroke	3.0 in. x 1.6 in. x 12.7 in. (75 mm x 40 mm x 323 mm)
Quick-coupler (1) bore x rod diameter x stroke	1.8 in. x 1.2 in. x 7.5 in. (45 mm x 30 mm x 190 mm)

The piston rods and cylinder bodies are made of high-strength steel. A shock-absorbing mechanism is fitted in all cylinders to ensure shock-free operation and extended piston life.

NOTE: Where applicable, dimensions are in accordance with Society of Automotive Engineers (SAE) and ISO standards. Specifications and design are subject to change without notice. Pictures of DEVELON compact track loaders may show other than standard equipment. All dimensions are shown in inches. Respective metric dimensions are enclosed by parentheses. Rounding may impact specifications. DEVELON equipment is manufactured with a Quality Management System that is in compliance with ISO 9001:2008. All dimensions are given for DEVELON compact track loaders equipped with 15.7-inch (400 mm) block rubber tracks.

Dimensions & Working Range

			DTL26
Tumbler distance		A	59.1" (1502 mm)
Overall length of track		B	78.8" (2002 mm)
Length (without bucket)		C	120.1" (3052 mm)
Length (bucket on ground)		D	153.2" (3891 mm)
Max. reach (arms parallel to ground)		E	61.3" (1558 mm)
Bucket pin reach at max. lift		F	22.3" (566 mm)
Reach at max. lift and dump		G	43.8" (1114 mm)
Ground clearance		H	8.9" (226 mm)
Height to top of cab		I	83.3" (2116 mm)
Max. overall height		J	162.8" (4137 mm)
Bucket pin height at max. lift		K	123.8" (3145 mm)
Clearance at max. lift and dump		L	89.9" (2284 mm)
Vehicle width	320 mm shoe	M	71.7" (1821 mm)
	400 mm shoe		74.8" (1901 mm)
Track gauge		N	59.1" (1501 mm)
Bucket width (factory bucket)		O	72.0" (1829 mm)
Departure angle		P	32°
Rollback angle		Q	25°
Rack back angle at max. height		R	86°
Max. dump angle		S	47.5°
Turning radius from center, rear		T	68.8" (1747 mm)
Turning radius from center, coupler		U	60.6" (1539 mm)
Turning radius from center, bucket		V	92.7" (2356 mm)

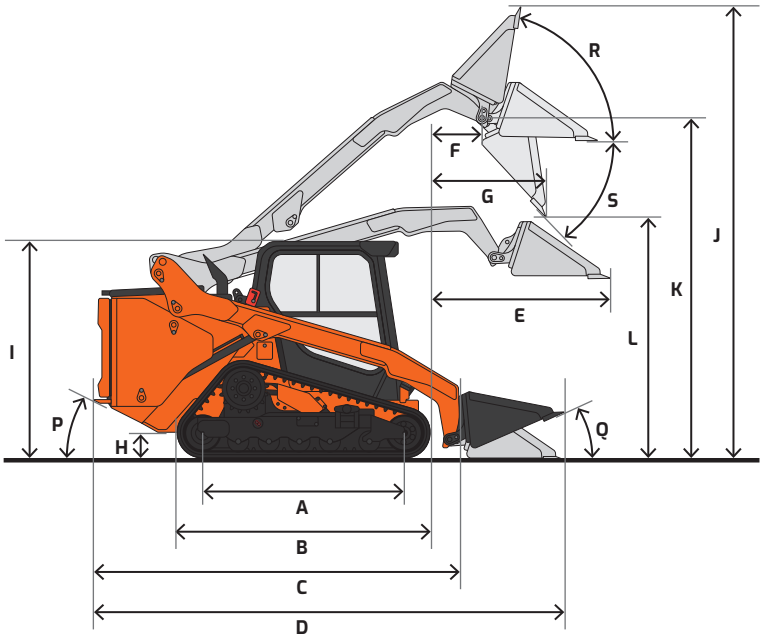

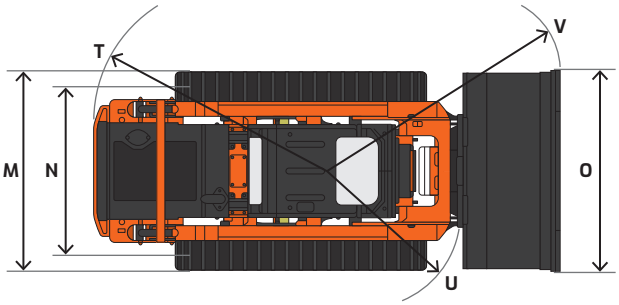

Standard & Optional Equipment

■ Standard ● Optional

Engine

Emissions, Tier 4 final (EPA)	■
4-cylinder	■
Common-rail direct injection	■
Turbocharged	■
Powercore air cleaner	■
Diesel oxidation catalyst (DOC) aftertreatment	■

Hydraulic

Variable displacement axial piston main pump	■
Load-sensing control valve, electronic control	■
Gear fan motor, reversable	■
DC 12 V solenoid valve pack	■
Diaphragm-type pilot accumulator	■
Element return filter	■
Mesh element suction filter	■
HST filter	■
Hydraulic quick-coupler	■

Electrical

Alternator – 12 V, 90 amp	■
12 V battery, 100 AH	■
Lights, work (LED): front (2), rear (2)	■
Rotating beacon	●
DSM port	■
Rearview camera	■
Around view camera with ultrasonic sensor	●
3.0 global telematics (cell only)	■
Positive terminal rear access	■
Master cutoff switch	■

Cabin

1/2" polycarbonate swing-out door with wiper/washer (US31)	■
Slide-open side windows	■
Skylight	■
Seat - Heated - Adjustable - Air-suspension (US31) - Mechanical suspension (US20) - 2" (51 mm) seat belt	■
Heat and air conditioner (US31)	■
8" touch screen LCD monitor	■
USB charger	■
Power socket, 12 V	■
Cup holder	■
Interior light	■
Rearview mirror	■
Emergency strip-off rear window	■

Controls

Joystick controls Left, travel control (ISO) - Creep speed thumb button - Horn thumb button - Aux 5 thumb button - Aux 6 thumb button - Aux 7, 2-speed trigger Right, arm & bucket control (ISO) - Aux 1 & 2 thumbwheel - Aux 3 thumb button - Aux 4 thumb button - Loader arm float trigger	■
DeSOx manual regen switch	■
Engine throttle control dial	■
Accelerator/decelerator foot throttle	■
Switches, A-pillar-mounted Left - Starter (key) - Aux 7, 2-speed - Aux 8 - Reversing fan - Hour meter Right - Engine throttle dial - Parking brake - Hydraulic cut-off - Quick-coupler	■
Keypad buttons - Continuous flow - Front & rear lamp - Wiper & washer	■
Keypad buttons - Self-leveling - Ride control - Bucket shake	●
Rotating beacon switch	●

Display Monitor & Warnings

Touch screen display monitor - Fuel level - DEF level - Engine coolant temperature - Hydraulic oil temperature - Tachometer - Digital clock with date - Home/menu button - Back/return button - Integrated radio & Bluetooth® audio	■
Mode selections - Auto idle - Rearview camera - Favorites - Trip hours - Creep speed level - Auxilary flow step - Pattern control (ISO, H)	■
Backup alarm	■

Travel Mechanism

2-speed axial piston HST pump	■
Radial piston travel motor	■
17-tooth sprocket	■
Mechanical pilot pressure parking brake	■

Undercarriage

Hydraulically adjusted recoil mechanism	■
Rigid mount frame	■
Triple flange lower rollers (each side)	4
Double flange front idler (US20)	■
Triple flange front idler (US31)	■
Single flange rear idler (US20)	■
Triple flange rear idler (US31)	■

Tracks

12.6" (320 mm) multi-bar pattern	●
12.6" (320 mm) block pattern	●
15.7" (400 mm) multi-bar pattern	■
15.7" (400 mm) block pattern	●

Smart Assist Features

Bucket shake	■
Attachment positioner	■
Auto return to dig	■
Lift arm end damping	■
Ride control (US31)	■

Other

Manuals - Operation & Maintenance - AEM Safety Manual	■
Vandalism protection - Door locks - Lockable panels - Lockable fluid fill points	■
300 lb. (136 kg) additional counterweight	●

Certain specification(s) are based on engineering calculations and are not actual measurements. Specification(s) are provided for comparison purposes only and are subject to change without notice. Specification(s) for your individual DEVELON equipment will vary based on normal variations in design, manufacturing, operating conditions, and other factors. Pictures of DEVELON units may show other than standard equipment.

Powered by **Innovation**

na.develon-ce.com/dtl26

DTL26 Compact Track Loader Spec Sheet
Printed in the U.S.A.
26907_002_D061726

DEVELON

A brand of HD Construction Equipment.

©2026 HD Construction Equipment
Develon North America. All rights reserved.