TECHNICAL
SPECIFICATION

EVOQUIP®
A TEREX BRAND



T-LINK
RECORD, DISPLAY
AND ANALYSE DATA

TC80
TRACKED CONVEYOR

TC80 TRACKED CONVEYOR



HYBRID

OVERVIEW

Total Weight	16,750kg (36,927bs)	
Transport	Length	11.88m (38′ 11″)
	Height	2.88m (9′ 5″)
	Width	2.25m (7′ 4″)
Working @ 24º	Length	21.4m (70′ 3″)
	Height	10.23m (33′ 7″)
	Width	2.25m (7′ 4″)
Power Unit	Tier 3: Deutz D2011 L04I 36.4kW (48hp) or, Tier 4F: Deutz TD 2.9 L04 45kW (60hp) or, Stage V: Deutz TD 2.9 L4 45kW (60hp)	

NOTE: Dimensions may differ slightly from sales drawings due to differences in angles / reference points.

FEATURES & BENEFITS

- High capacity up to 500tph (551 US tph).
- Maximum feed size up to 150mm (6″).
- Eliminates the need for wheeled loaders to create stockpiles - reduces labour and maintenance costs.
- Eliminates the need for handling material multiple times - reduces labour and maintenance costs.
- Improved material quality due to reduced compaction, degradation, segregation and contamination.
- Can accept loads from multiple sources.
- Multiple hopper options available depending on required capacities and operators loading methods or application.
- Rapid set up time and manoeuvrability around site.
- Reduced fuel consumption due to reduced reliance on wheeled loaders.
- Reduced wear on wheeled loaders where a conveyor is utilised.
- Hydraulic folding head section.
- Tensioned polyurethane belt cleaner.
- Hydraulic feed in height adjustment.
- Hydraulic fold over for transport.
- Rosta scraper.
- 40 degree rollers.
- Variable speed conveyor via engine speed.
- Feedboot with removable 6mm steel wear liners.



TC80 TRACKED CONVEYOR

FEEDBOOT

Standard Feedboot Capacity:	0.6 m^3 (0.8yd^3)
Feed in Width:	1300mm (4' 3")
Extended Feedboot Capacity:	1.6m^3 (2.1yd^3)
Extended Feed in Width:	1850mm (6' 1")
Standard Min Feed Height @24°:	1336mm (4' 6")
Extended Min Feed Height @24°:	1634mm (5' 4")



DISCHARGE CONVEYOR

Width:	1050mm (42")
Belt Centres:	22.8m (74' 10")
Belt Type:	Plain
Belt Spec:	EP400 3 4+2
Drive Drum Dia:	286mm (11.3")
Tail Drum Dia:	270mm (10.6")
Max Belt Speed:	136m/m
Motor Size:	800cc
Operating Angle:	5° - 25°
Discharge Height @18°:	8.34m (27' 4")
Stockpile Capacity @18° & 37° Angle of Repose:	1070m^3 (1399 Cu.Yd)
Discharge Height @25°:	10.41m (34' 1")
Stockpile Capacity @25° & 37° Angle of Repose:	2080m^3 (2721 Cu.Yd)
Variable Speed:	Yes via engine speed

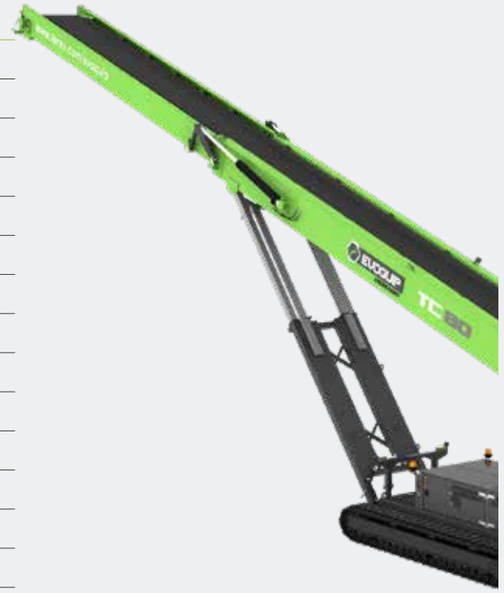

TRACKS

Shoe Width:	400mm (1' 4")
Sprocket Centre:	4000mm (13' 1")
Gradability:	30°
Speed:	0.9km/h
Speed High:	1.6km/h



POWER UNIT & HYDRAULICS

Engine (Tier 3):	Deutz D2011 L041
Power Rating:	36.4kW (48hp)
RPM:	2200rpm
Crankshaft Pump:	27/27
Engine (Tier 4F):	Deutz TD 2.9 L04
Power Rating:	45kW (60hp)
RPM:	2200rpm
Crankshaft Pump:	27/27
Engine (Stage V):	Deutz TD 2.9 L4
Power Rating:	45kW (60hp)
RPM:	2200rpm
Crankshaft Pump:	27/27
Diesel Tank Capacity:	200L (53 US GAL)
Hydraulic Tank Capacity:	260L (69 US GAL)



OPTIONS

- 6mm AR400 steel wear feedboot liners
- 20mm rubber wear feedboot liners
- Feedboot extension c/w steel wear liners
- Feedboot extension c/w 20mm rubber wear liners
- Feedboot extension c/w 6mm AR400 steel wear liners
- Impact bed at feedboot area
- Impact rollers at feedboot area
- Large capacity biomass hopper (including landing legs and full length impact bed)
- Blade type / primary scraper
- Conveyor fitted with chevron belt EP315/3 Ply x 3 + 1.5 covers
- Conveyor fitted with heavy duty plain belt EP500 4 ply x 8+2 covers
- Conveyor under guard length of mid-section
- Conveyor head drum guarding
- Conveyor dust covers
- Conveyor water dust suppression (spray bar only)
- Conveyor full length skirting rubber
- Powerunit c/w hydraulic oil, Century 100 - (Recommended for ambient temperatures between +15 to +50°C)
- Radio remote control for tracking only
- Pull cord emergency stop to control panel side or non-control panel side
- Overband magnet option complete with hydraulic kit and support frames
- Twin hydraulic drive discharge conveyor
- Hybrid complete with electric drive conveyor
- Twin electric drive 2 x 11kW motors (400tph max) - hydraulic conveyor drive removed
- Anti-rollback flaps

TC80 TRACKED CONVEYOR

WORKING DIMENSIONS

(Low feed with hopper extension)

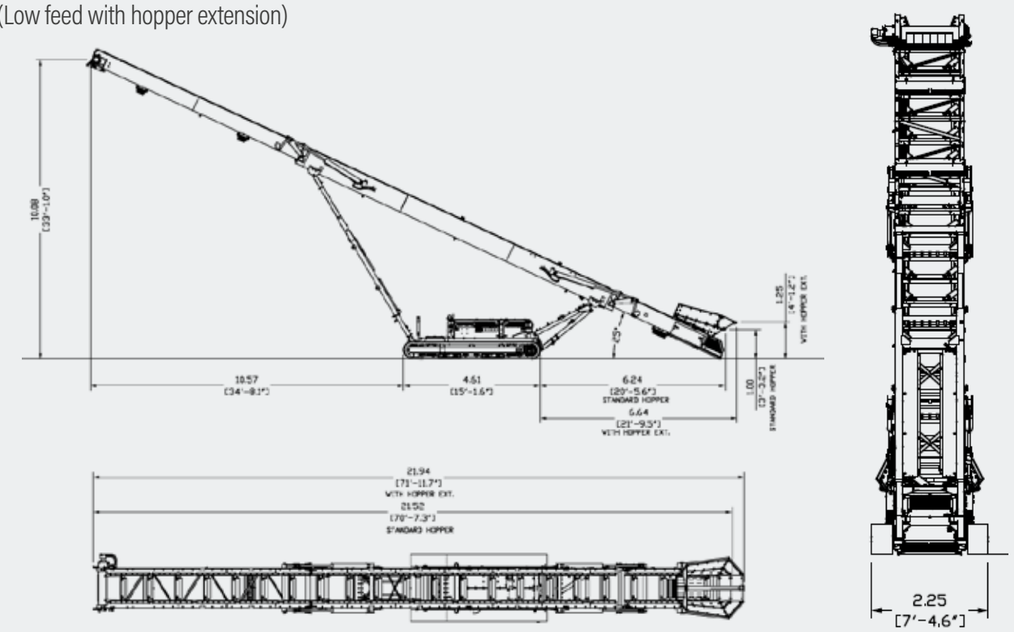

(High feed with hopper extension)

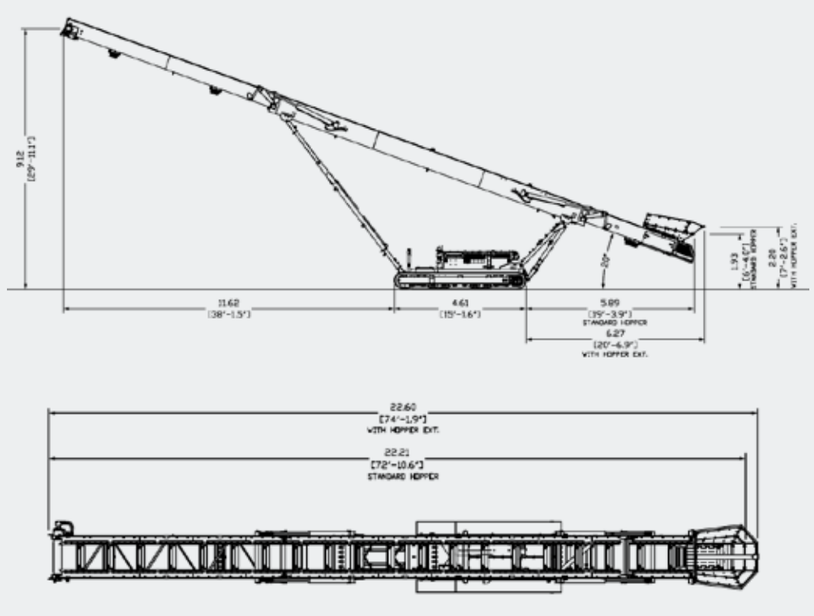

TRANSPORT DIMENSIONS

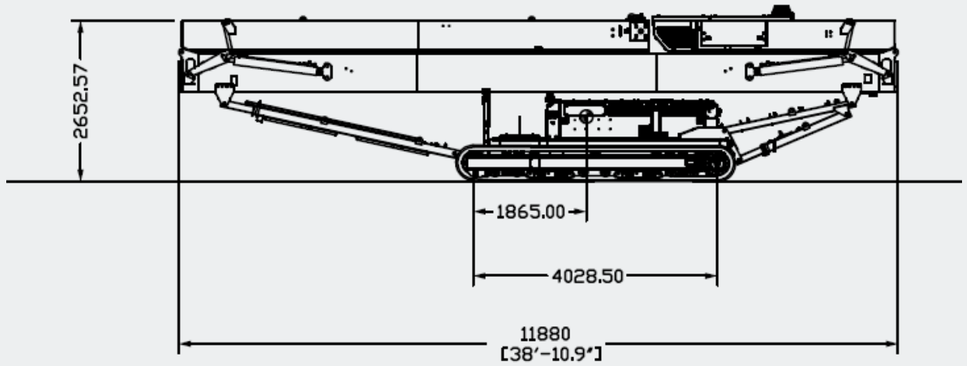

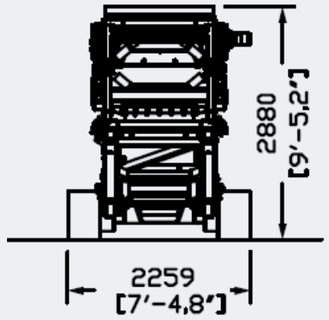



200 Coalisland Road,
Dungannon, Co. Tyrone, BT714DR
Tel: +442887718500
Email: EvoQuip@terex.com

terex.com/EvoQuip

The material in this document is for information only and is subject to change without notice.
Terex assumes no liability resulting from errors or omissions in this document, or from the use of the information contained herein.
Due to continual product development we reserve the right to change specifications without notice.
Photographs are for illustrative purposes only, some or all of the machines in the illustrations may be fitted with optional extras.
Copyright 2021 Terex GB Limited.
Published and Printed in November 2021.