PRODUCT BROCHURE

TR516 TROMMEL SERIES

EDGE INNOVATION AT WORK



COMPACT. FLEXIBLE. SCREENING

+44(0)2887 740525 info@edgeinnovate.com edgeinnovate.com

COMPACT. FLEXIBLE.
SCREENING



SUPERIOR SEPARATION

INTELLIGENT LOAD MANAGEMENT

180° RADIAL FINES CONVEYOR

LOW FUEL CONSUMPTION



TR516 SERIES
FEATURES & BENEFITS



The EDGE Innovate TR516 trommel range has been designed for mid to large scale operations that may be constrained for space. Designed with durability in mind, the robust TR516 trommel range has proven capabilities in the recycling, composting and construction & demolition industries.

Thanks to design features such as the sixteen foot long barrel, variable speed control and a feed conveyor with intelligent load sensing controls; the EDGE 516 screening trommel is able to produce top-quality fine materials such as compost, gravel, sand and topsoil with ease. Various mesh sizes and barrel types are available for optimum screening performance.

By engineering a compact trommel with a radial discharge conveyor, the TR516 trommel has been able to maintain the benefits of a side conveyor product with all the advantages of an end conveyor offering.

KEY HIGHLIGHTS

- 1.54m (5') X 4.9m (16') long drum provides excellent screening results.
- Fuel consumption from as little as 12-15 LTR/HR (3-4 USG/HR)
- Highly efficient hydraulic drive system with Intelligent load sensing.
- 180° Radial Conveyor creates impressive stockpile volumes.
- Various aperture meshes, punch plate panels, fully welded punch plate drums with scrolls available.




RADIAL CONVEYOR REDUCES
MATERIAL HANDLING BY UP TO
75%
KOMATSU

TR516 SERIES
DESIGN FEATURES

Hydraulic folding function enables a quick transfer from transport to operational mode.

1.54m (5') X 4.9m (16' long drum driven via a direct 4 wheel drive system with a variable drum speed

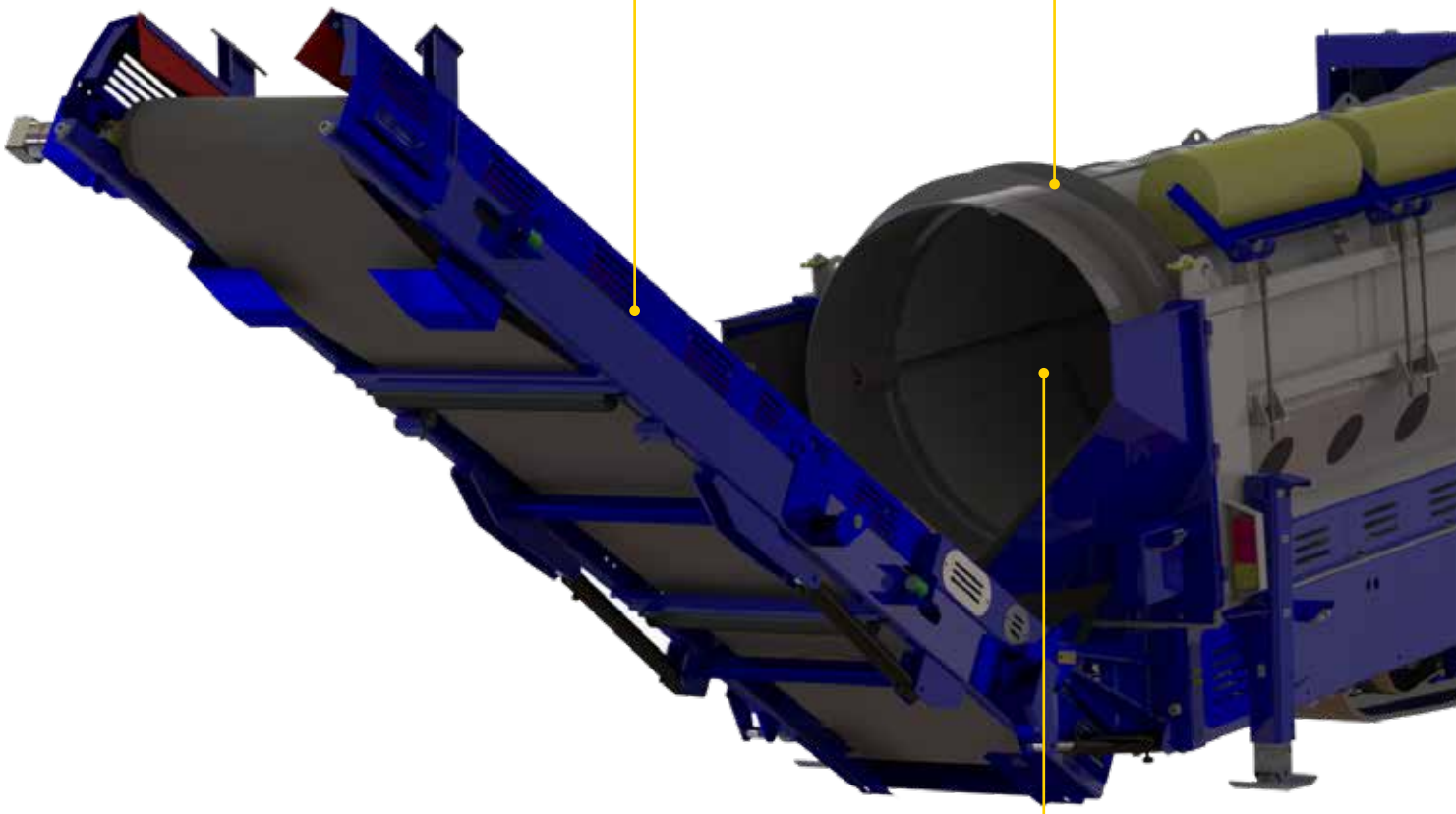

Various aperture meshes, punch plate panels, fully welded punch plate drums with scrolls are available.

Adjustable drum cleaning brushes ensure optimum screening efficiency.

Feed hopper houses a 900mm (36”) wide, variable speed feeder conveyor with load sensing functions to prevent drum overload.

Hopper capacity of up to 5m^3 (6.5 yds^3).

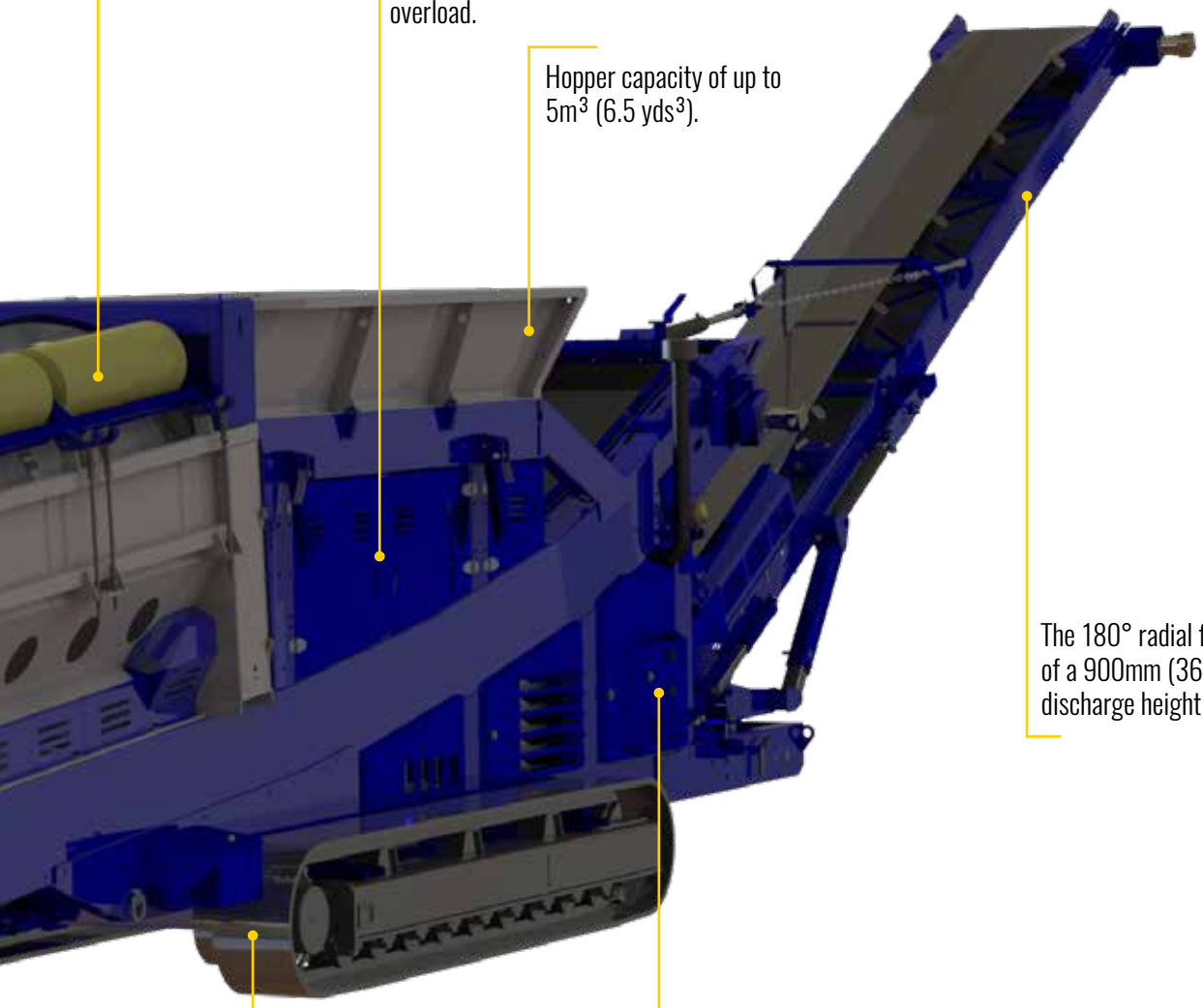

The 180° radial fines conveyor consists of a 900mm (36”) wide belt providing a discharge height of up to 5.3m (17’6”).

Powered by a CATERPILLAR C4.4 industrial power unit with an average fuel consumption of 12-15 Ltr/hr. (3-4USG)

Available with tracked, wheeled or static mounted chassis formats.

APPLICATIONS

C&D WASTE



MSW



COMPOST



MULCH



WOOD CHIP



TOP SOIL



TR516 SERIES
TECHNICAL SPECIFICATIONS

TRANSPORT DIMENSIONS	TRM516	TRT516
Length:	15.5m (51')	15.5m (51')
Width:	2.3m (7'7")	2.6m (8'7")
Height:	4m (13'1")	3.48m (11'5")
Shipping Method:	RoRo	RoRo
Gross Weight (Est):	18500KG / 20.3UST	26000KG / 28.6UST
CONVEYOR DATA		
Hopper Capacity:	5m³ (6.5yds³)	5m³ (6.5yds³)
Minimum Feed In Height:		
Collection Conv. Belt Width:	1.2m (48")	1.2m (48")
Fines Conv. Discharge Height:	5.7m (18'11")	5.3m (17'6")
Fines Conv. Stockpile Volume:	1310m³ (1714yds³)	1118m³ (1462yds³)
Oversize Conv. Discharge Height:	3.5m (11'4")	3.3m (10'11")
Oversize Conv. Stockpile Volume:	79m³ (103yds³)	60m³ (78yds³)
DRUM DATA		
Drum Length:	4.9m (16')	4.9m (16')
Drum Diameter:	1.54m (5')	1.54m (5')
Drive System:	Friction Four Wheel Drive	Friction Four Wheel Drive
Drum RPM:	0-25RPM	0-25RPM
Screening Angle:	3-7°	3-5°
POWERUNIT DATA		
Tier 3 Engine:	CAT4.4 74Kw (90Hp)	CAT4.4 74Kw (90Hp)
Tier 4 Final Engine:	CAT3.4B 86Kw (115Hp)	CAT3.4B 86Kw (115Hp)
Direct Electric:	Twin 45Kw	-

TRM516 OPERATIONAL DIMENSIONS

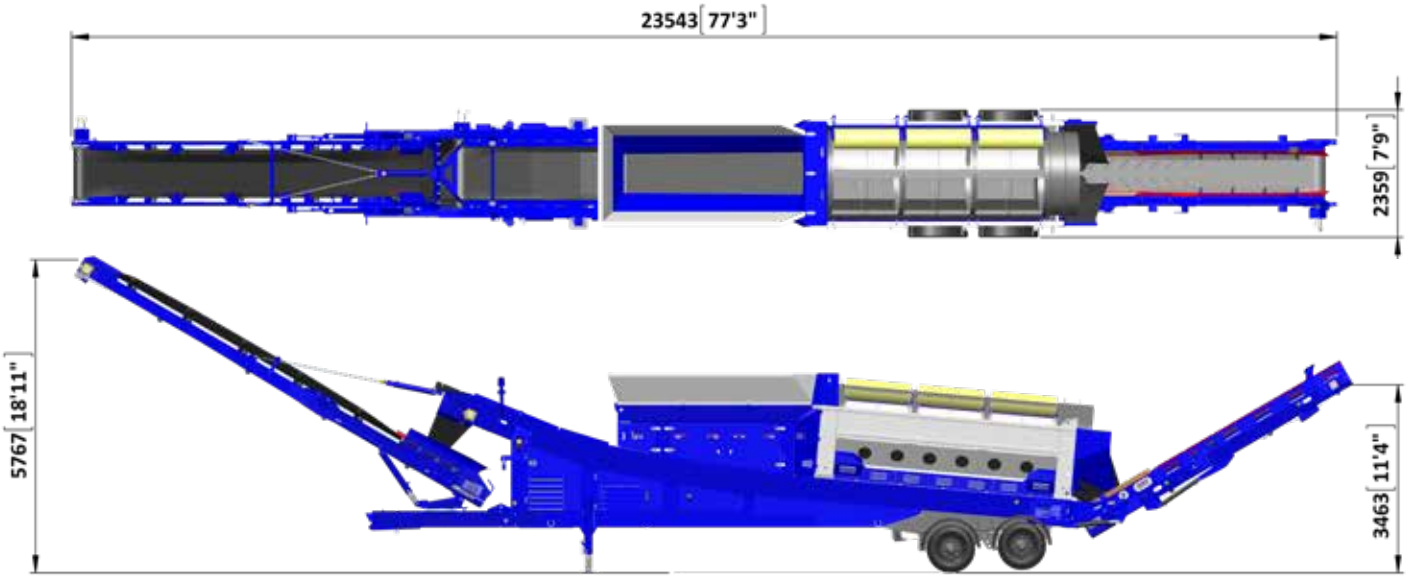

TRT516 OPERATIONAL DIMENSIONS

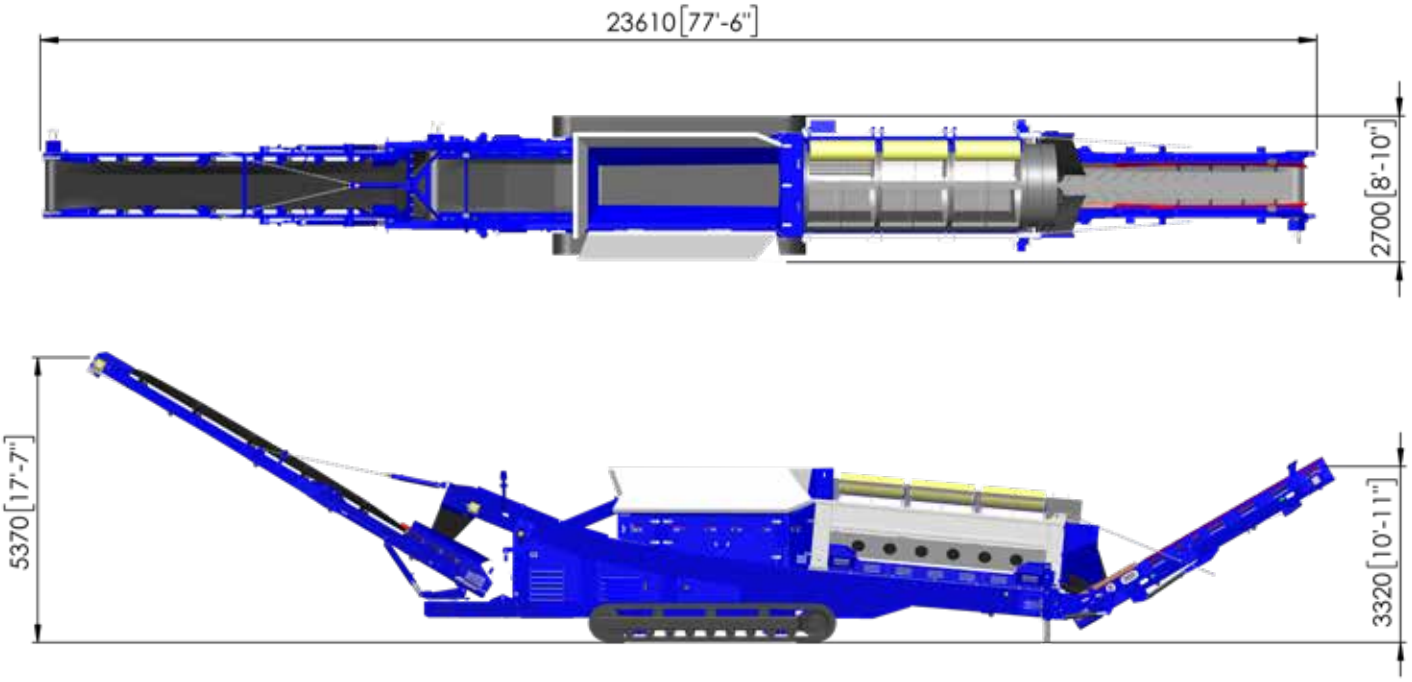

AVAILABLE OPTIONS

CHASSIS FORMATS



Tracked Mounted - Fully tracked for on-site manoeuvrability.



Wheeled Mounted. Ideal for operators with multiple sites or rental contractors.

POWER-SOURCE CONFIGURATIONS



LRC - Cat4.4 74Kw (100HP)
Tier 4 Final - CAT3.4B 86Kw (115Hp).



Direct Electric - Only available with a wheel mounted chassis.

SCREENING DRUM OPTIONS

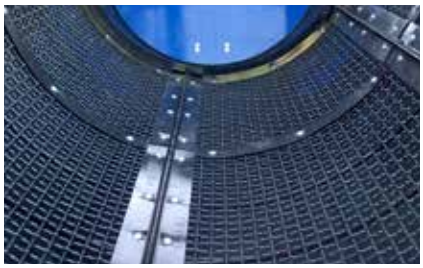

Mesh Panels - A large screening are suitable for compost, mulch, topsoil etc.

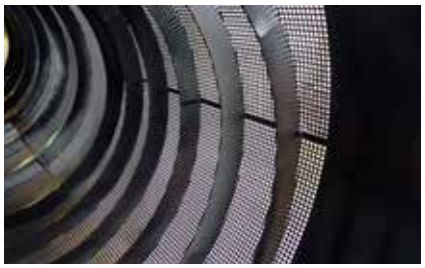

Spiral Drum - ideal for extending screening time of feed material.

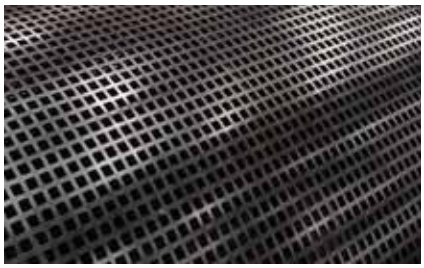

Punch Plate - suitable for abrasive materials with rough or large piece sizes.

ADDITIONAL SEPARATION OPTIONS



Reject Grid - manual or remote tipping grids available with various bofor bars.



Fully Contained Vacuum System - no secondary power source required.



Overband Magnet- fitted to collection conveyor to extract ferrous metal.



Magnetic Head Drum - Fitted to either discharge conevyors to extract ferrous metal.



Drum Knives.

Additional customisation is available upon request. Speak to your nearest EDGE distributor for details.

PRODUCT AND TECHNICAL SUPPORT

TRIED, TESTED & TRUSTED THROUGHOUT THE GLOBE

With our ethos of "Innovation at Work" EDGE not only persist in pushing the boundaries of design and manufacturing to produce hard working, quality machinery, we also bring that same ethos to our aftersales service in order to bring real benefits to customers right across the world.

At EDGE we like to see the sales transaction as the start of a long-term partnership. Our goal is to offer the best customer support in the market for the lifetime of the unit. EDGE has reinvested and expanded our after-sales department in order to streamline and provide the customer support we believe our customers deserve.

TECHNICAL ASSISTANCE

PARTS AVAILABILITY

DELIVERY

WARRANTY



EDGE INNOVATION AT WORK

2019.01



CONTACT US TODAY.

30 Farlough Road, Dungannon, Co.Tyrone, BT71 4DT, Northern Ireland

+44(0)2887 740525 info@edgeinnovate.com edgeinnovate.com