POWERSCREEN®
WARRIOR 1200
2 DECK INCLINE SCREEN

POWERSCREEN®
A TEREX BRAND

GET STARTED

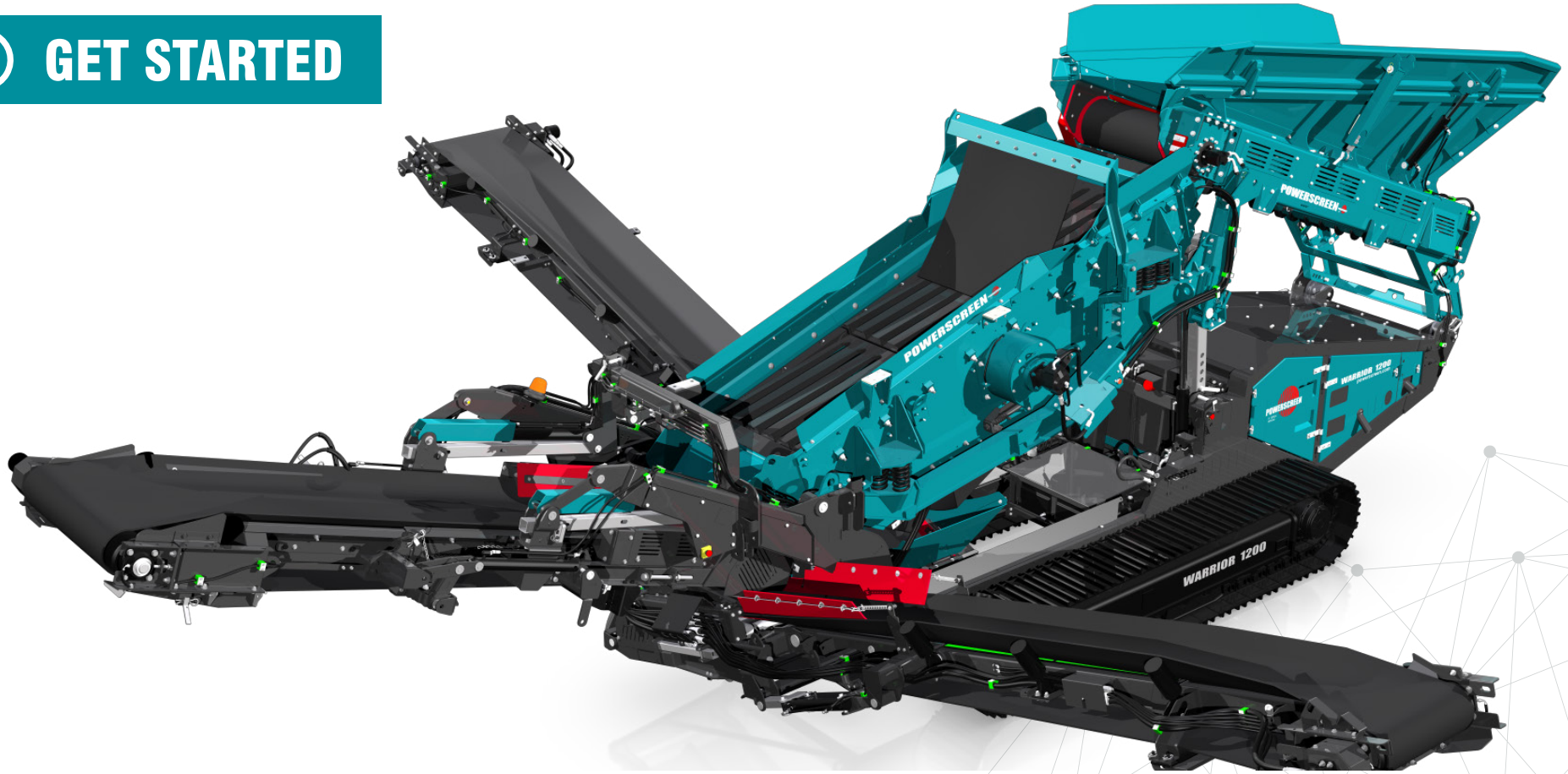

TECHNICAL SPECIFICATION - REV 1. 05/12/2018

To use my interactive features I need to be opened in 'Adobe Acrobat Reader' click here to download



WARRIOR 1200

- OVERVIEW
- HOPPER
- SCREENBOX
- HEAVY DUTY BELT FEEDER
  - TAIL CONVEYOR
  - SIDE CONVEYORS
- POWER UNIT & HYDRAULICS
- TRACKS
- OPTIONS
  - OTHER OPTIONS
- POWERSCREEN® PULSE
- DIMENSIONS

OVERVIEW

SPECIFICATION

Total weight	16,800kg (37,038lbs)	
Transport	**Length**	10.96 (36')**
	Width	2.25m (7' 5")
	Height	2.51m (8' 3")
Working	**Length**	11.63m (38' 2")
	Width	10.38m (34' 1'')
(screenbox at 14º)	**Height**	3.76m (12' 4")
Screenbox	3.6m x 1.17m (12' x 4')	
Power Unit	Diesel / Hydraulic	
Plant Colour	RAL 5021, RAL 7024 & RAL 9005	

(Weight & dimensions are approximate base unit values)

FEATURES & BENEFITS

- High capacity up to 300tph / 330 US tph (depending on media sizes & material type)
- Maximum feed size 300mm (1'). Maximum allowable feed size may vary depending on material type and screenbox media
- Smart design minimises weight but retains strength and robustness
- Ultra low fuel consumption with optimised hydraulics
- Rapid conversion from 3 way split to 2 way split (fully hydraulic)
- Heavy duty single shaft incline screenbox with adjustable stroke and angle
- Maximum mobility with heavy duty, low ground pressure tracks
- Removable heavy duty pendant remote control system
- Quick set up time
- High performance hydraulic system - cast iron pumps & motors complete with hydraulic cooler
- Versatile unit for 3 way splitting, stockpiling or scalping before or after a crusher
- Simple to operate & maintain
- Wear resistant steel hopper
- Variable speed hopper and conveyors
- Wide range of screen media available
- Power unit featuring a longitudinal engine arrangement to aid access & serviceability
- Hydraulically folding tail conveyor and hopper extensions (options)
- Shared media with Warrior 600*

APPLICATIONS

Aggregate
Sand & gravel
Blasted rock
River rock

Recycling
Top soil
C&D waste
Composted materials
Wood by-products
Overburden
Foundry waste

Mining
Processed ores
Processed minerals

* Excludes end tensioned bottom deck mesh and top deck fingers
**Transport length can be reduced to 10.3m (33' 10'') in alternative short transport position (transport height thereby increases to 3.12m (10' 3'')).



WARRIOR 1200

- OVERVIEW
- HOPPER
- SCREENBOX
- HEAVY DUTY BELT FEEDER
  - TAIL CONVEYOR
  - SIDE CONVEYORS
- POWER UNIT & HYDRAULICS
- TRACKS
- OPTIONS
  - OTHER OPTIONS
- POWERSCREEN® PULSE
- DIMENSIONS

HOPPER

Target area: 3.4m (11’ 2”) long x 2.12m (6’ 11”) wide
Hopper capacity: 5m³ (6.5 cu. yd.)

Feed in height (rear): 3.16 (10’ 4”)
Feed in height (side): 4.02 (13’ 2”)

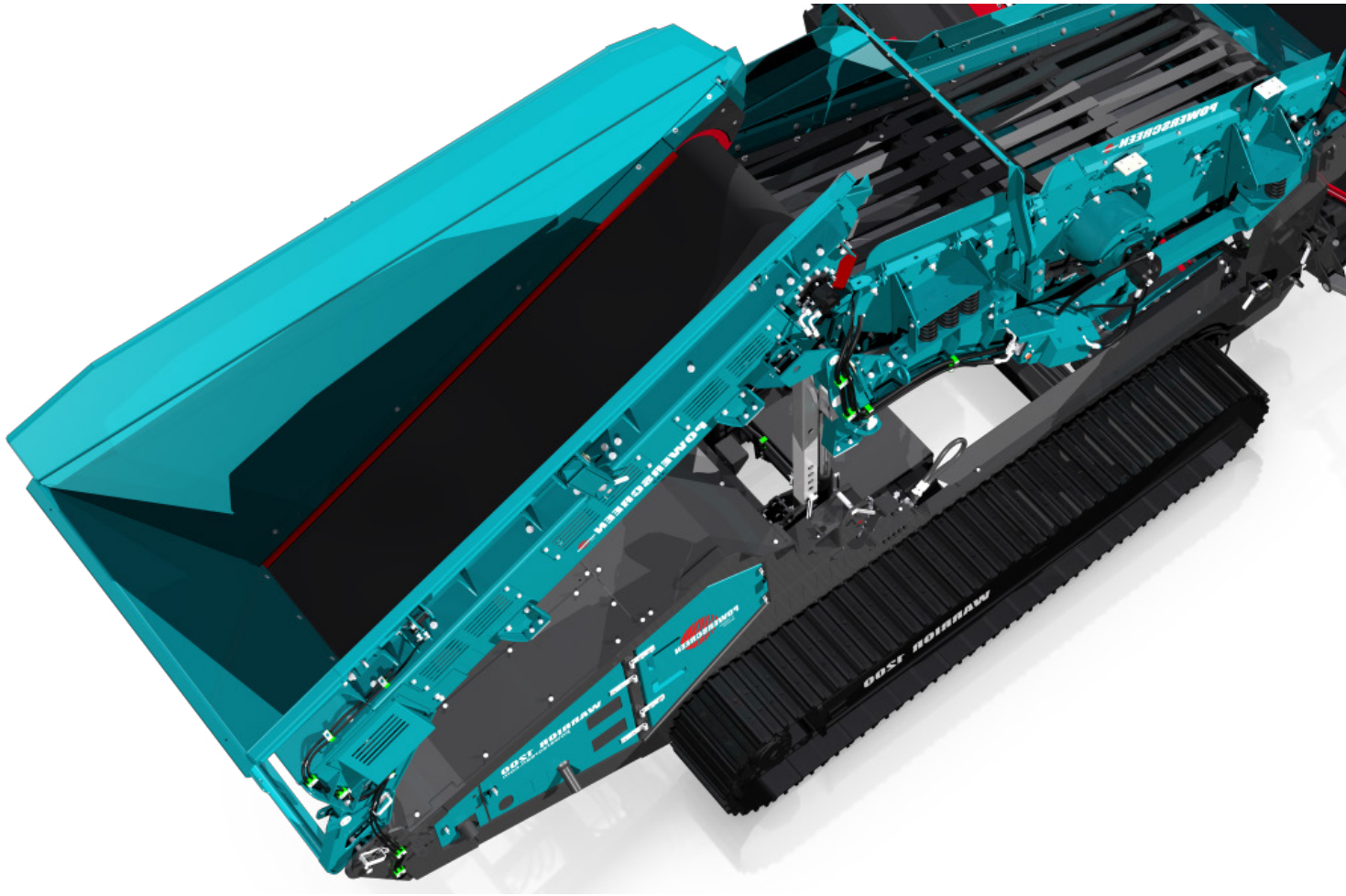



WARRIOR 1200

- OVERVIEW
- HOPPER
- SCREENBOX
- HEAVY DUTY BELT FEEDER
  - TAIL CONVEYOR
  - SIDE CONVEYORS
- POWER UNIT & HYDRAULICS
- TRACKS
- OPTIONS
  - OTHER OPTIONS
- POWERSCREEN® PULSE
- DIMENSIONS

SCREENBOX

Heavy duty 3.68m x 1.17m (12' x 4') 2 deck screen
Highly aggressive screen drive
2 bearing shaft arrangement complete with direct drive system
Top deck : 3.6m x 1.17m (11' 10'' x 3' 10'')
Bottom deck : 3.13m x 1.15m (10' 3'' x 3' 9'')

Side tension top deck
End tension bottom deck
Variable stroke: 9mm - 11mm

Variable screen angle: 14º - 18º
Top deck media: bofor deck, fingers, punch plate and mesh
Bottom deck media: mesh, fingers
Rubber screen blanket (option)

*Rigid chute attached to bottom of screenbox. This allows material passing through the bottom deck to be transferred to the fines conveyor.

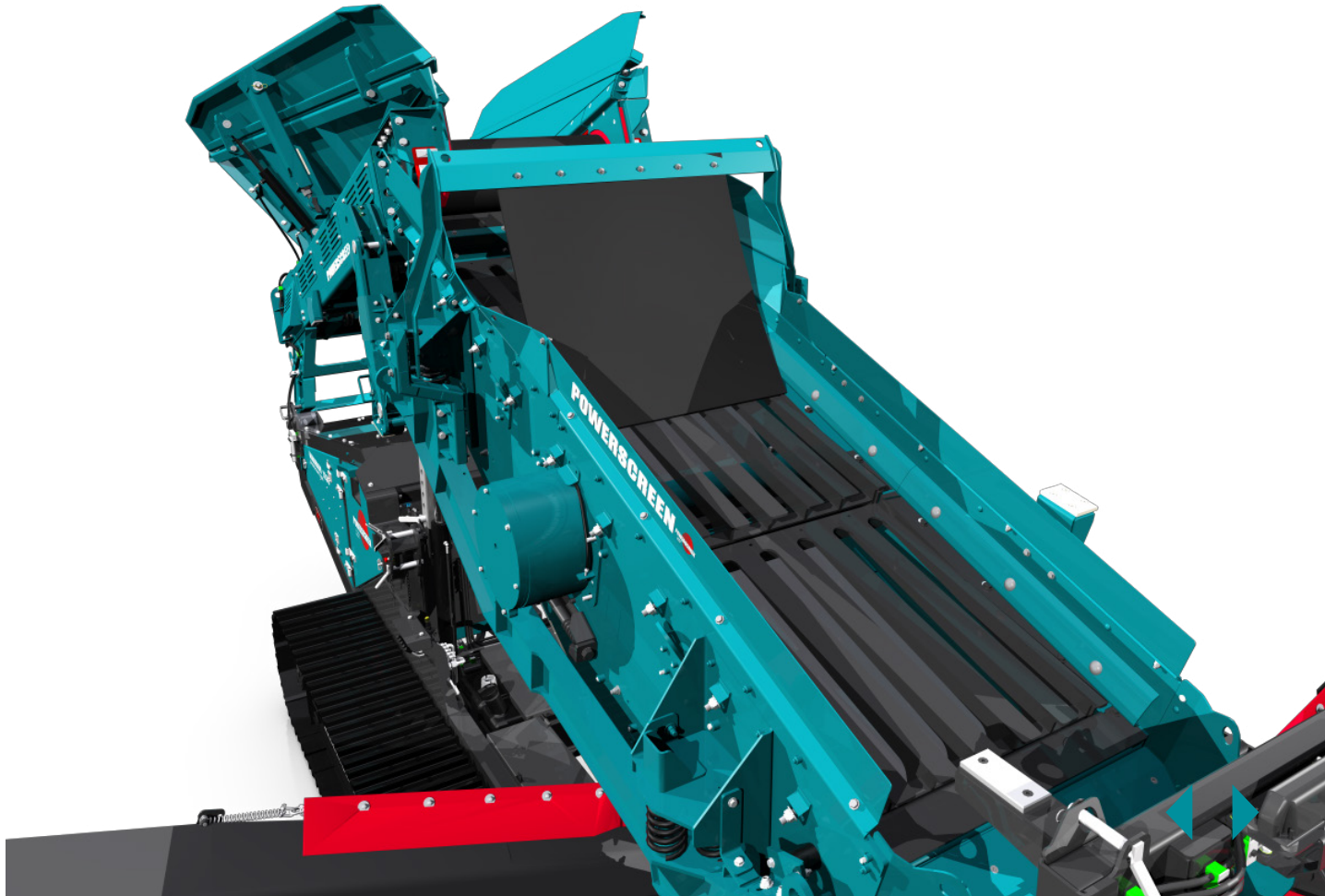



WARRIOR 1200

- OVERVIEW
- HOPPER
- SCREENBOX
- HEAVY DUTY BELT FEEDER
  - TAIL CONVEYOR
  - SIDE CONVEYORS
- POWER UNIT & HYDRAULICS
- TRACKS
- OPTIONS
  - OTHER OPTIONS
- POWERSCREEN® PULSE
- DIMENSIONS

CONVEYORS

HEAVY DUTY BELT FEEDER

1000mm (3’ 3”) 4 ply plain belt
3.22m (10’ 7”) drum centres
335mm (13.2”) drive drum diameter
270mm (10.6’’) tail drum diameter
Variable speed control
Supergrip drive drum standard

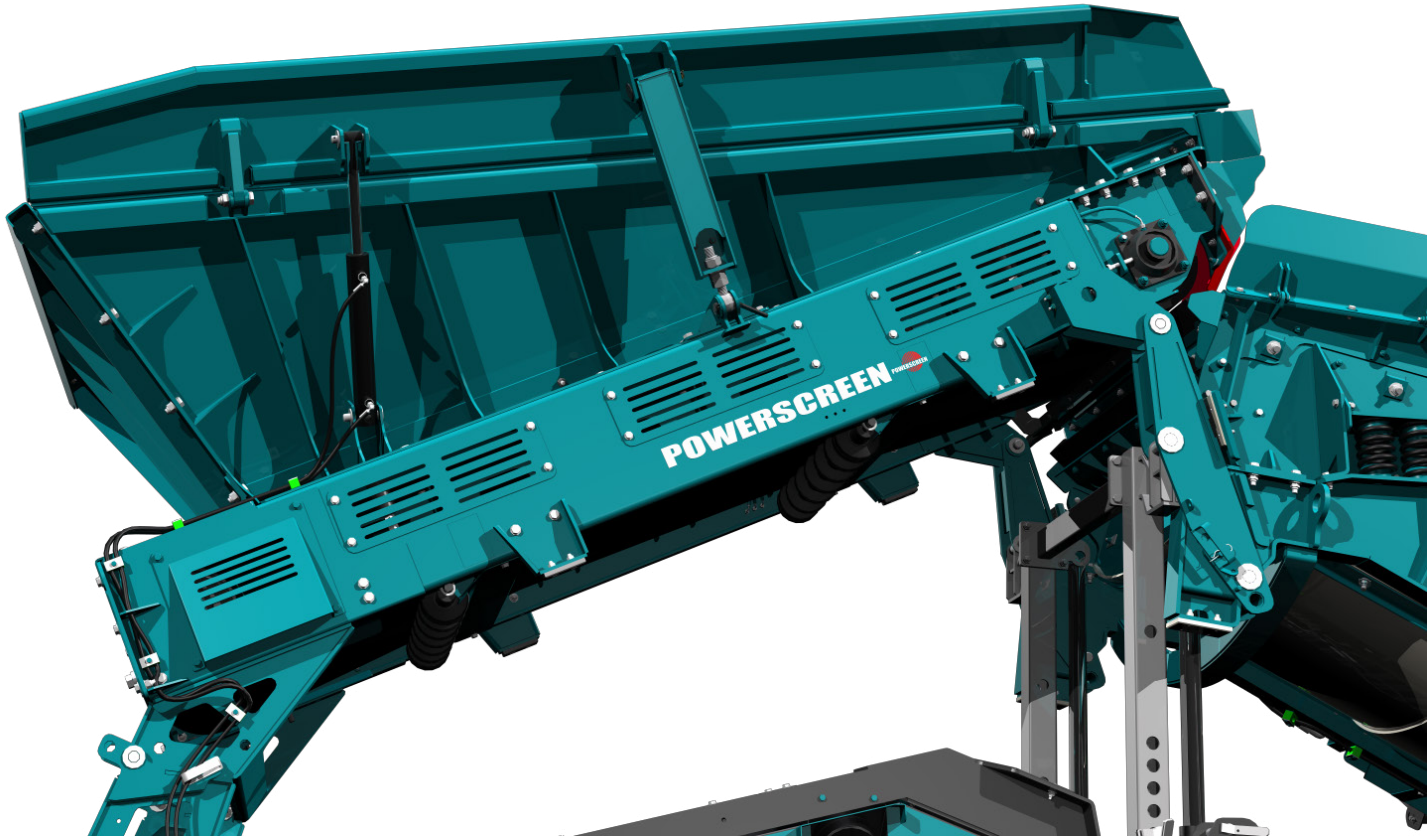



WARRIOR 1200

- OVERVIEW
- HOPPER
- SCREENBOX
- HEAVY DUTY BELT FEEDER
  - TAIL CONVEYOR
  - SIDE CONVEYORS
- POWER UNIT & HYDRAULICS
- TRACKS
- OPTIONS
  - OTHER OPTIONS
- POWERSCREEN® PULSE
- DIMENSIONS

CONVEYORS

OVERSIZE - TAIL CONVEYOR

1000mm (3’ 3”) wide 3 ply chevron belt
4.23m (13’ 11’’) drum centres
216mm (8.5”) drum diameter (drive)
2.80m (9’ 2”) stockpile height
33m^3 (43 cu. yd.) stockpile volume
Variable speed control
Impact slips along length
Fixed angle: 20^0
Hydraulic adjustment for 3 way split to 2 way split conversion

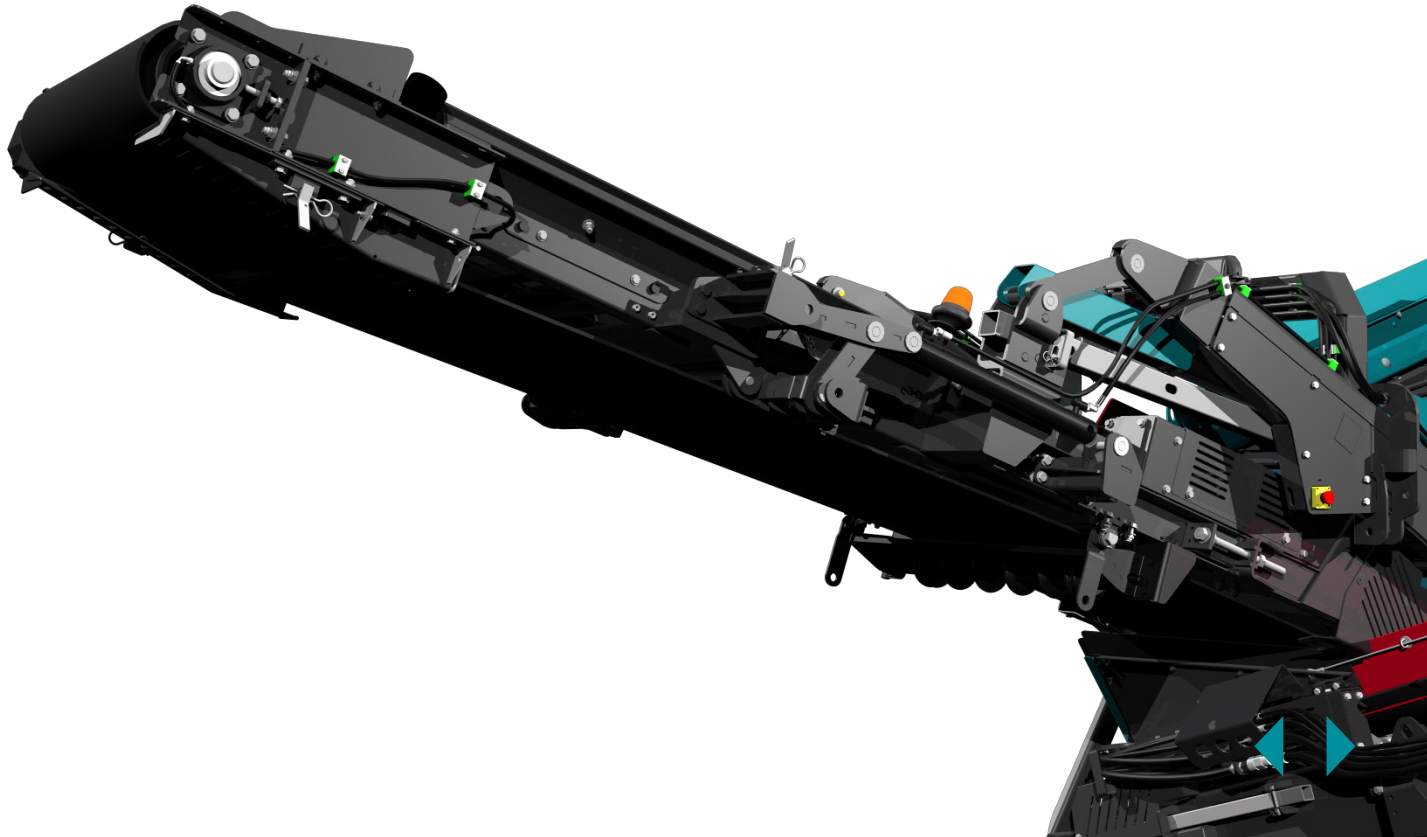



WARRIOR 1200

- OVERVIEW
- HOPPER
- SCREENBOX
- HEAVY DUTY BELT FEEDER
  - TAIL CONVEYOR
  - SIDE CONVEYORS
- POWER UNIT & HYDRAULICS
- TRACKS
- OPTIONS
  - OTHER OPTIONS
- POWERSCREEN® PULSE
- DIMENSIONS

CONVEYORS

FINESIZE - SIDE CONVEYOR

800mm (2' 7") wide 3 ply plain belt
5.9m (19' 4") drum centres
216mm (8.5") drum diameter (drive)
3m (9' 10") stockpile height
40m³ (52.5 cu. yd.) stockpile volume
Hydraulically folding
Variable angle: 19-25.5º
Variable speed control
Folding feedboot
Self tensioning skirting extending from feedboot

MIDSIZE - SIDE CONVEYOR

650mm (2' 2") wide 3 ply plain belt
5.9m (19' 4") drum centres
216mm (8.5") drum diameter (drive)
2.95m (9' 8") stockpile height
38m³ (50 cu. yd.) stockpile volume
Variable speed control
Hydraulically folding
Variable angle: 18-25.5º
Self tensioning skirting extending from feedboot

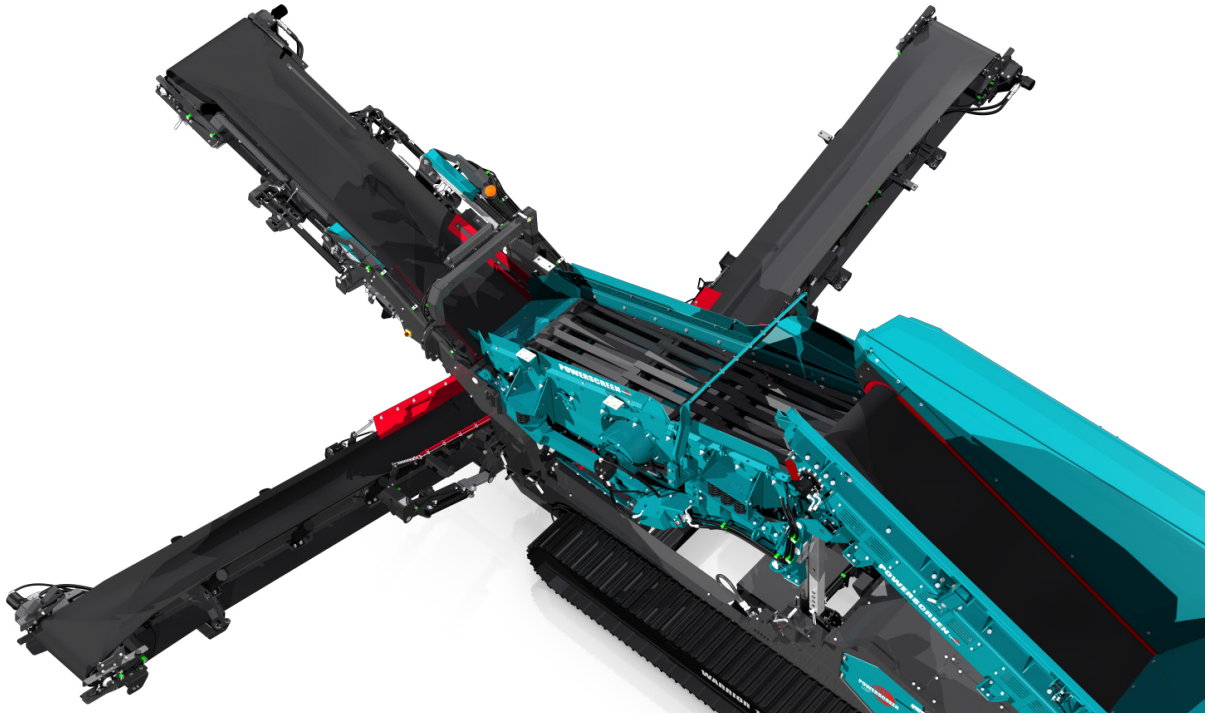



WARRIOR 1200

- OVERVIEW
- HOPPER
- SCREENBOX
- HEAVY DUTY BELT FEEDER
  - TAIL CONVEYOR
  - SIDE CONVEYORS
- POWER UNIT & HYDRAULICS
- TRACKS
- OPTIONS
  - OTHER OPTIONS
- POWERSCREEN® PULSE
- DIMENSIONS

POWER UNIT & HYDRAULICS

Engine Tier 3 Equivalent:
Deutz D2011 L04i

Performance:
49.4kW (66.2 hp) @ 2300rpm

Engine Tier 4F / Stage IIIB:
Deutz TD2.9 L04

Performance:
54kW (72.4hp) @ 2300rpm

Tank Capacities:

Fuel:	145 L (38 US Gal)
Hydraulic oil:	250 L (66 US Gal)

Pumps:

Flywheel pump:	Cast iron triple 27/27/27cc/rev

Motors:

Belt feeder:	Cast iron 125cc/rev
Tail conveyor:	Cast iron 500cc/rev
Fines conveyor:	Cast iron 400cc/rev
Midsize side conveyor:	Cast iron 400cc/rev
Screen:	Cast iron 56cc/rev





WARRIOR 1200

- OVERVIEW
- HOPPER
- SCREENBOX
- HEAVY DUTY BELT FEEDER
  - TAIL CONVEYOR
  - SIDE CONVEYORS
- POWER UNIT & HYDRAULICS
- TRACKS
- OPTIONS
  - OTHER OPTIONS
- POWERSCREEN® PULSE
- DIMENSIONS

TRACKS

Track width:	300mm (1')
Sprocket centres:	3427mm (11' 3'')
Approximate speed:	0.85kph (0.53mph) (slow)
	1.5kph (0.95mph) (fast)
Total flow per track:	60 Lpm

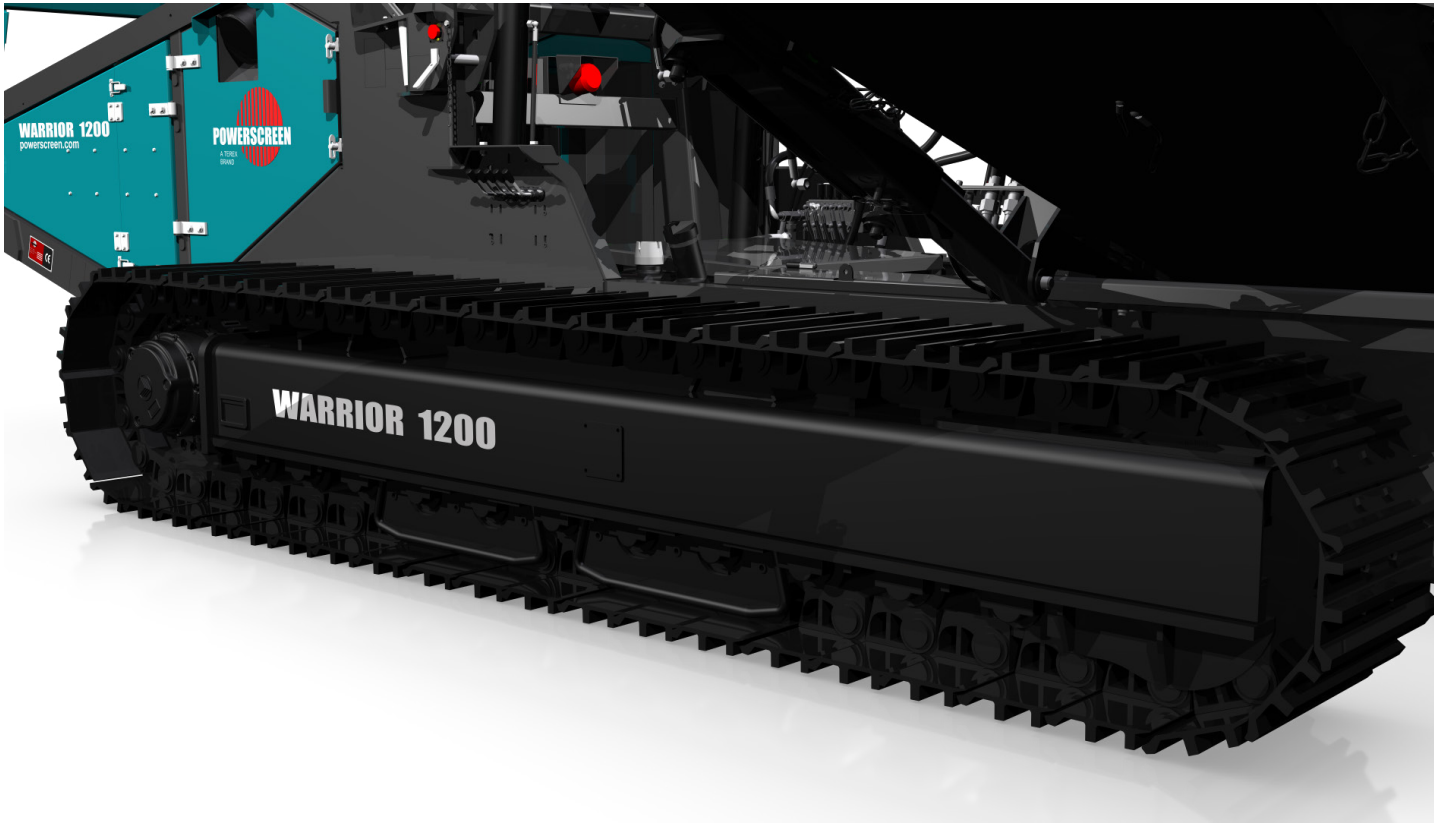



WARRIOR 1200

- OVERVIEW
- HOPPER
- SCREENBOX
- HEAVY DUTY BELT FEEDER
  - TAIL CONVEYOR
  - SIDE CONVEYORS
- POWER UNIT & HYDRAULICS
- TRACKS
- OPTIONS
  - OTHER OPTIONS
- POWERSCREEN® PULSE
- DIMENSIONS

OPTIONS

SCREEN BLANKET

Screen blanket available to slow material progress across the top deck.

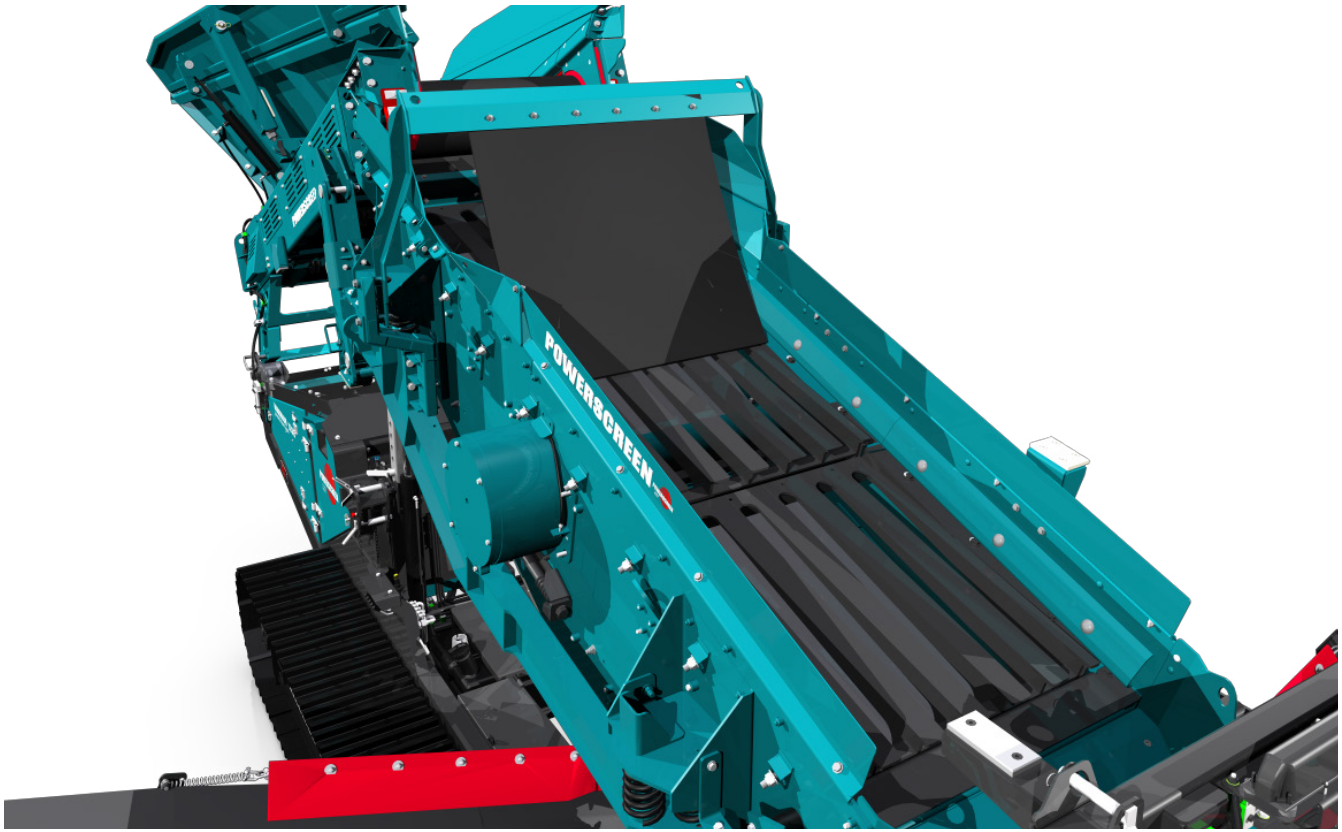



WARRIOR 1200

- OVERVIEW
- HOPPER
- SCREENBOX
- HEAVY DUTY BELT FEEDER
  - TAIL CONVEYOR
  - SIDE CONVEYORS
- POWER UNIT & HYDRAULICS
- TRACKS
- OPTIONS
  - OTHER OPTIONS
- POWERSCREEN® PULSE
- DIMENSIONS

OPTIONS

OTHER OPTIONS

- Custom colour machine
- Chevron side conveyor belts
- Auto lubrication system
- Radio controlled tracking
- Quick release wedge screen tensioning (side tensioned only)
- Wide range of screen media
- Screen blanket
- Hydraulically folding tail conveyor
- Hydraulically folding hopper extensions
- Hydraulic extended fines conveyor (Q2 2019)
- Powerscreen Pulse

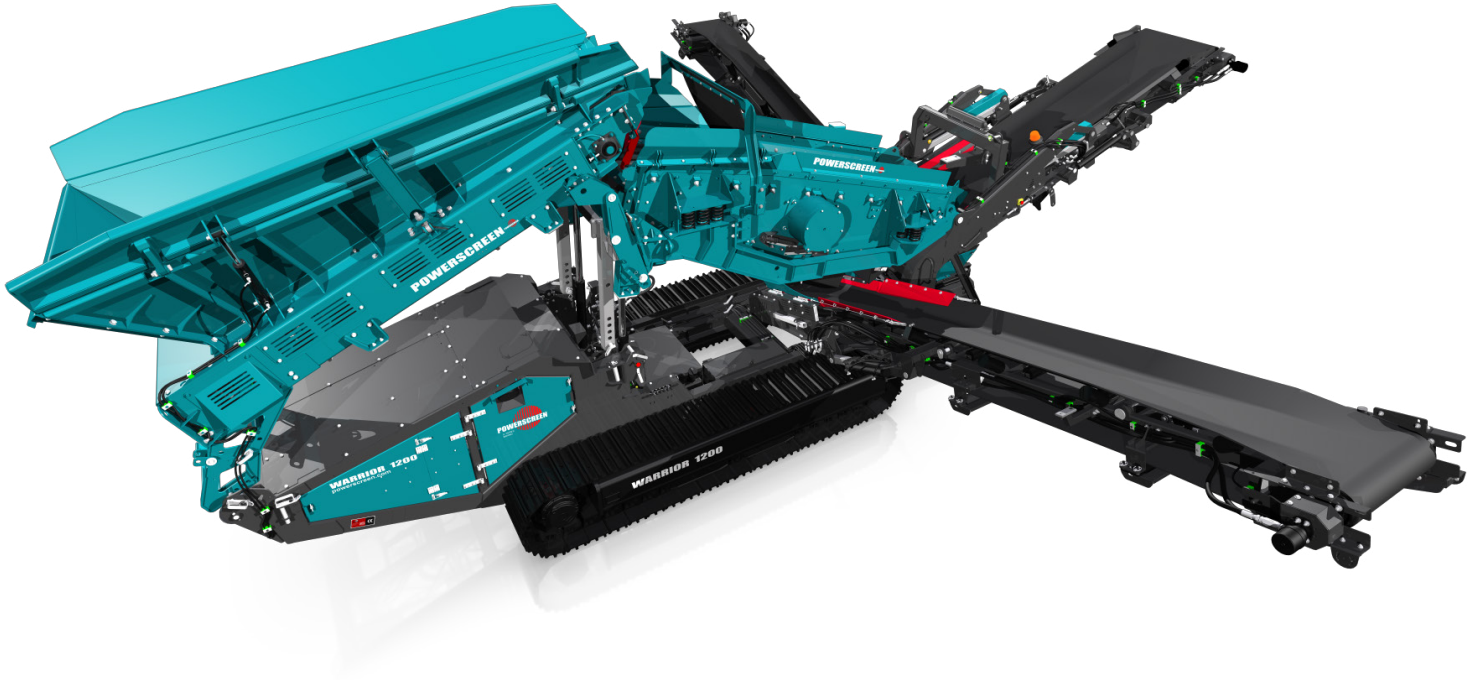



WARRIOR 1200

- OVERVIEW
- HOPPER
- SCREENBOX
- HEAVY DUTY BELT FEEDER
  - TAIL CONVEYOR
  - SIDE CONVEYORS
- POWER UNIT & HYDRAULICS
- TRACKS
- OPTIONS
  - OTHER OPTIONS
- POWERSCREEN® PULSE
- DIMENSIONS

POWERSCREEN PULSE

RECORD, DISPLAY AND ANALYSE DATA:

HIGH EFFICIENCY THROUGH PRECISE INFORMATION

Available online anywhere and at any time: comprehensive information on the GPS location, start and stop times, fuel consumption, tonnages, cone settings, wear ratings, operating hours, maintenance status, and much more.



AVAILABLE ANYWHERE AND AT ANY TIME

DASHBOARD DISPLAY

FLEET OVERVIEW

WEEKLY REPORT DIRECT TO YOUR INBOX

GPS: MACHINE TRACKING

REPORTING
UTILISATION, PERFORMANCE & PART SPECIFIC





WARRIOR 1200

- OVERVIEW
- HOPPER
- SCREENBOX
- HEAVY DUTY BELT FEEDER
  - TAIL CONVEYOR
  - SIDE CONVEYORS
- POWER UNIT & HYDRAULICS
- TRACKS
- OPTIONS
  - OTHER OPTIONS
- POWERSCREEN® PULSE
- DIMENSIONS

DIMENSIONS

Figure 1: Warrior 1200
Working Position

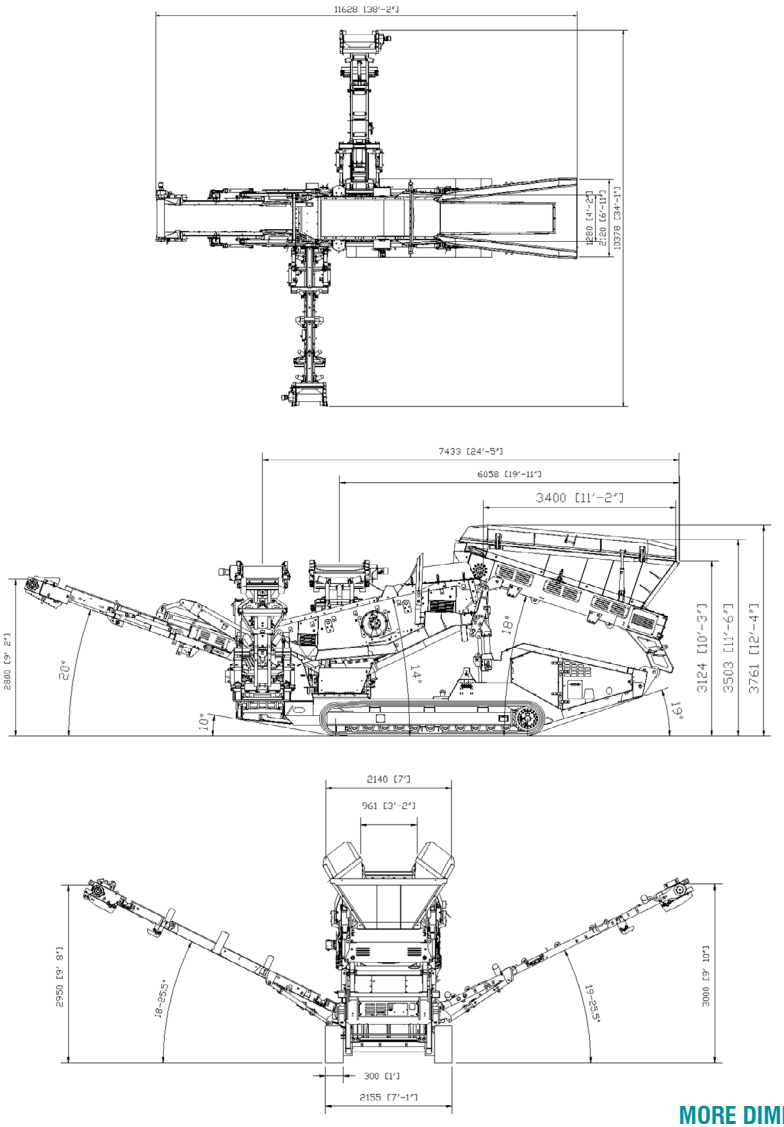

MORE DIMENSIONS OVERLEAF



WARRIOR 1200

- OVERVIEW
- HOPPER
- SCREENBOX
- HEAVY DUTY BELT FEEDER
  - TAIL CONVEYOR
  - SIDE CONVEYORS
- POWER UNIT & HYDRAULICS
- TRACKS
- OPTIONS
  - OTHER OPTIONS
- POWERSCREEN® PULSE
- DIMENSIONS

DIMENSIONS

Figure 2: Warrior 1200
Transport Position

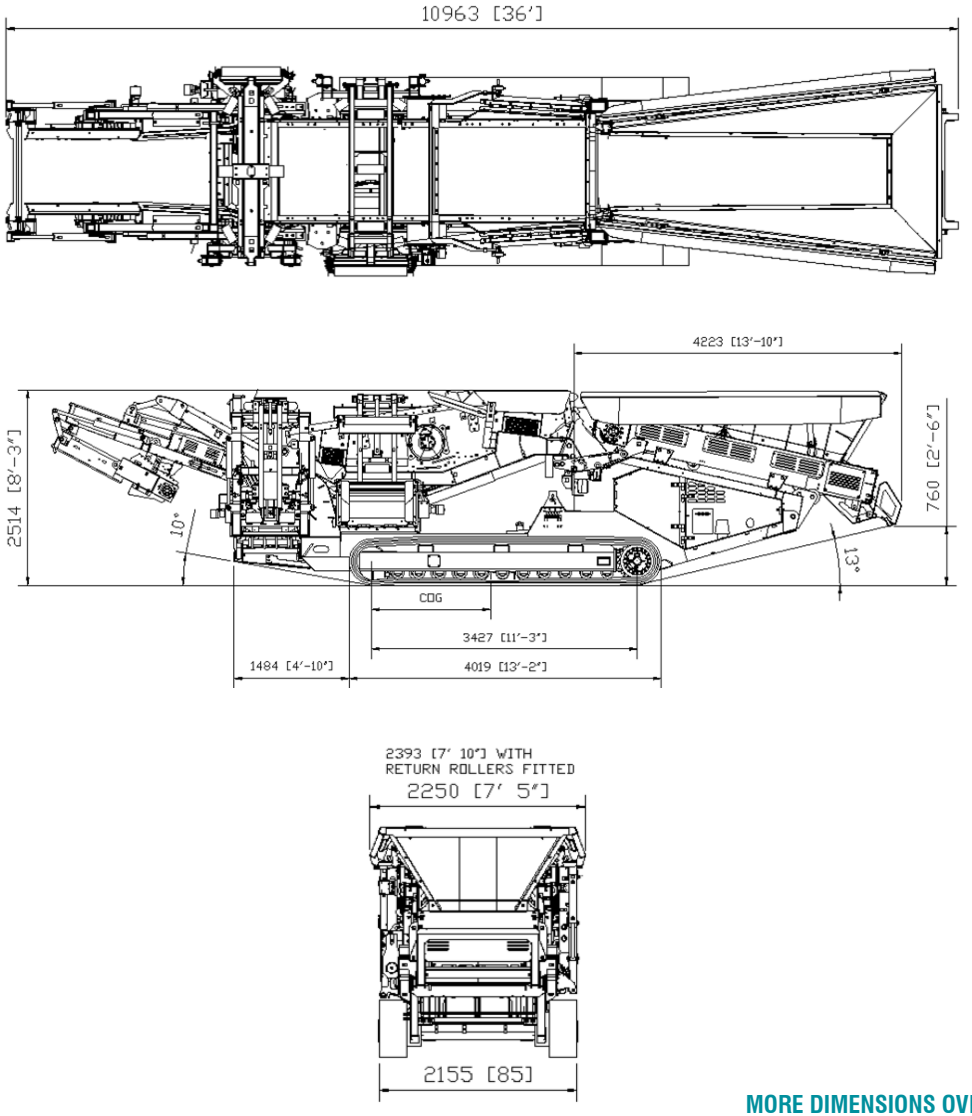

MORE DIMENSIONS OVERLEAF



WARRIOR 1200

- OVERVIEW
- HOPPER
- SCREENBOX
- HEAVY DUTY BELT FEEDER
  - TAIL CONVEYOR
  - SIDE CONVEYORS
- POWER UNIT & HYDRAULICS
- TRACKS
- OPTIONS
  - OTHER OPTIONS
- POWERSCREEN® PULSE
- DIMENSIONS

DIMENSIONS

Figure 3: Warrior 1200
Extended Fines Conveyor
Working Position

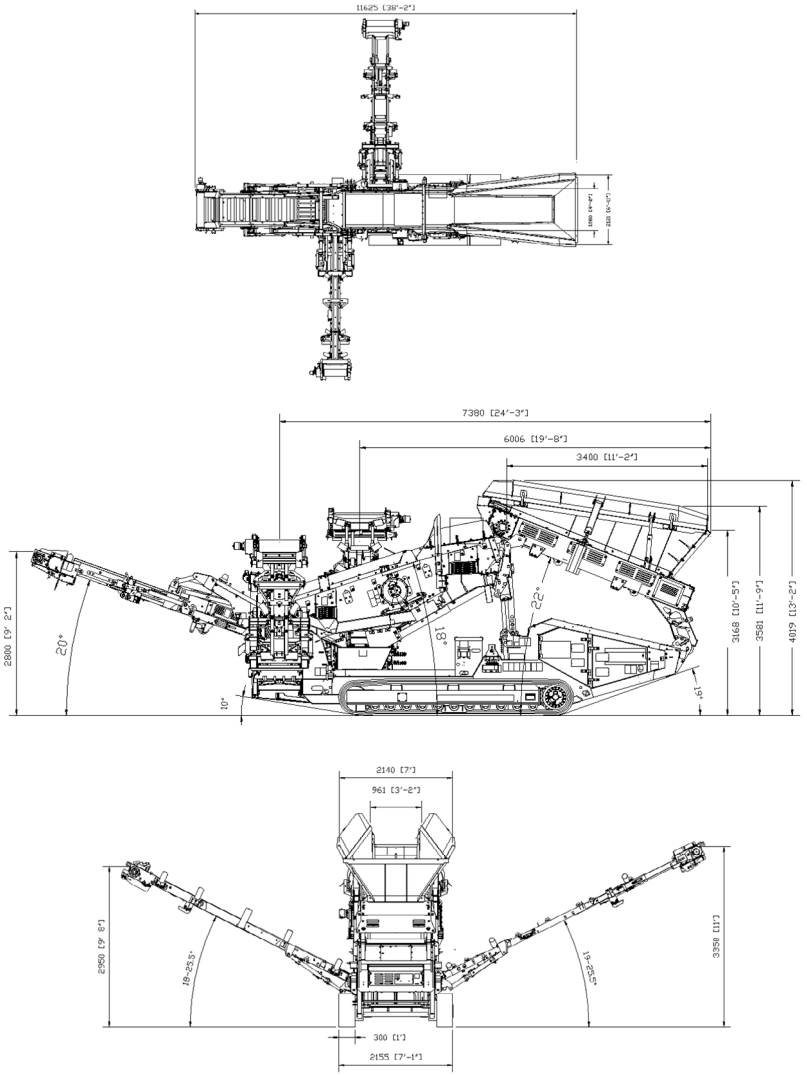

MORE DIMENSIONS OVERLEAF



WARRIOR 1200

- OVERVIEW
- HOPPER
- SCREENBOX
- HEAVY DUTY BELT FEEDER
  - TAIL CONVEYOR
  - SIDE CONVEYORS
- POWER UNIT & HYDRAULICS
- TRACKS
- OPTIONS
  - OTHER OPTIONS
- POWERSCREEN® PULSE
- DIMENSIONS

DIMENSIONS

Figure 4: Warrior 1200
Short Version Transport Position

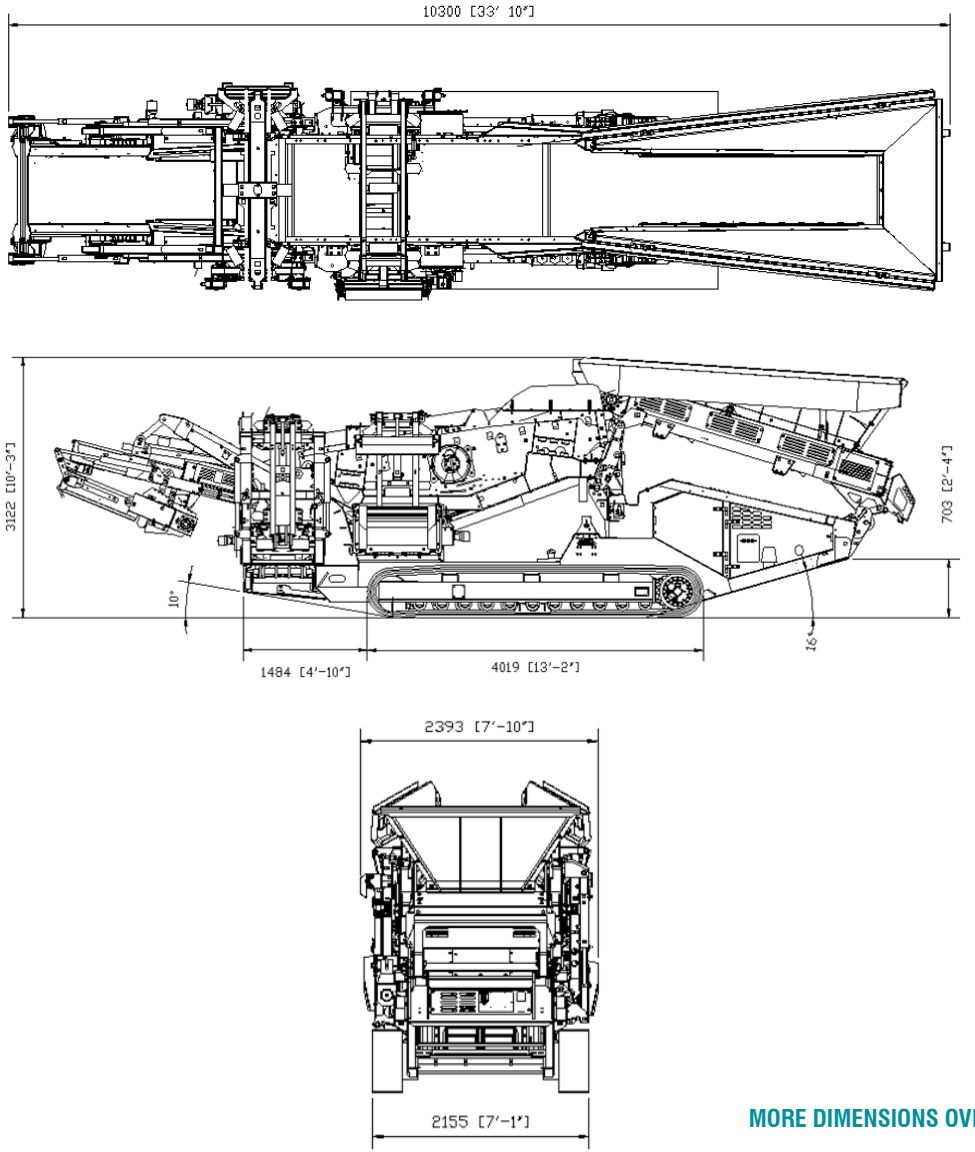

MORE DIMENSIONS OVERLEAF



WARRIOR 1200

- OVERVIEW
- HOPPER
- SCREENBOX
- HEAVY DUTY BELT FEEDER
  - TAIL CONVEYOR
  - SIDE CONVEYORS
- POWER UNIT & HYDRAULICS
- TRACKS
- OPTIONS
  - OTHER OPTIONS
- POWERSCREEN® PULSE
- DIMENSIONS

DIMENSIONS

Figure 5: Warrior 1200
Tail Conveyor, Hopper Extensions, Screen Blanket Not Folded
Transport Position

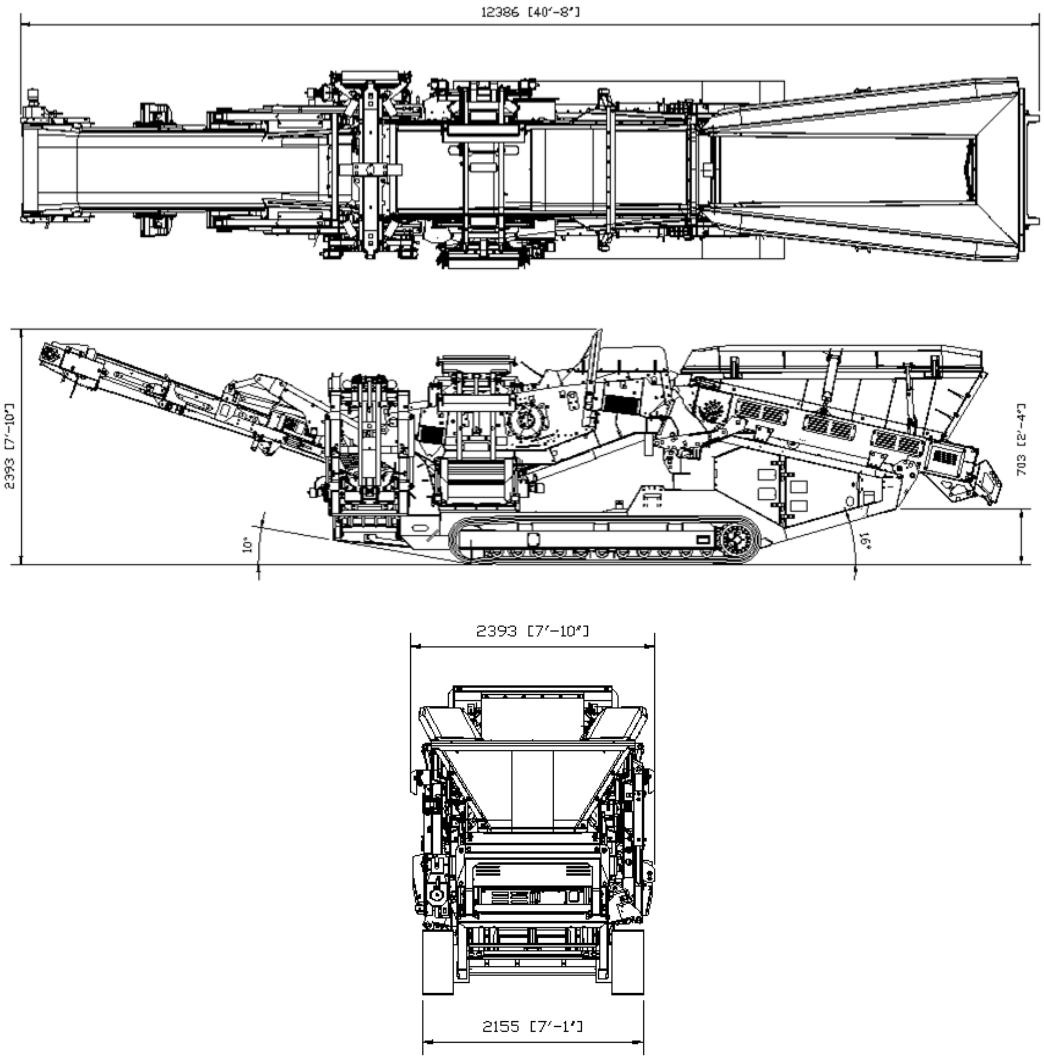

Powerscreen equipment complies with CE requirements.

Please consult Powerscreen if you have any other specific requirements in respect of guarding, noise or vibration levels, dust emissions, or any other factors relevant to health and safety measures or environmental protection needs. On receipt of specific requests, we will endeavour to ascertain the need for additional equipment and, if appropriate, quote extra to contract prices.

All reasonable steps have been taken to ensure the accuracy of this publication, however due to a policy of continual product development we reserve the right to change specifications without notice.

It is the importers' responsibility to check that all equipment supplied complies with local legislation regulatory requirements.

Plant performance figures given in this brochure are for illustration purposes only and will vary depending upon various factors, including feed material gradings and characteristics. Information relating to capacity or performance contained within this publication is not intended to be, nor will be, legally binding.

GET IN TOUCH

Dungannon
200 Coalisland Road, Dungannon,
Co Tyrone, BT71 4DR, Northern Ireland
Tel: +44 (0) 28 87 718 500
Fax: +44 (0) 28 87 747 231

Louisville
11001 Electron Drive,
Louisville, Kentucky, 40299 USA
Tel: +1 502 736 5200
Fax: +1 502 736 5202

www.powerscreen.com