KOBELCO

Hydraulic Excavator

ED160 BLADE RUNNER

ED160 BR-7

Performance X Design

■ **Bucket Capacity :**

0.50 cu. yd. SAE

■ **Engine Power :**

105 hp {78.6 kW} @ 2,200rpm (SAE NET)

■ **Operating Weight :**

37,000 lbf {16,800 kg}



DRIVEN BY PASSION

Complies with the latest exhaust emission regulations

US EPA Tier IV Final

EU (NRMM) Stage V

Japanese Regulations


KOBELCO

Performance X Design

PERFORMANCE BY DESIGN

The next generation of KOBELCO excavators bring together superior performance and thoughtful design like never before. Performance enhancements offer greater efficiency and productivity along with increased power and speed. Design improvements provide the ultimate in comfort and control.

KOBELCO refuses to compromise, creating machines that meet every challenge.



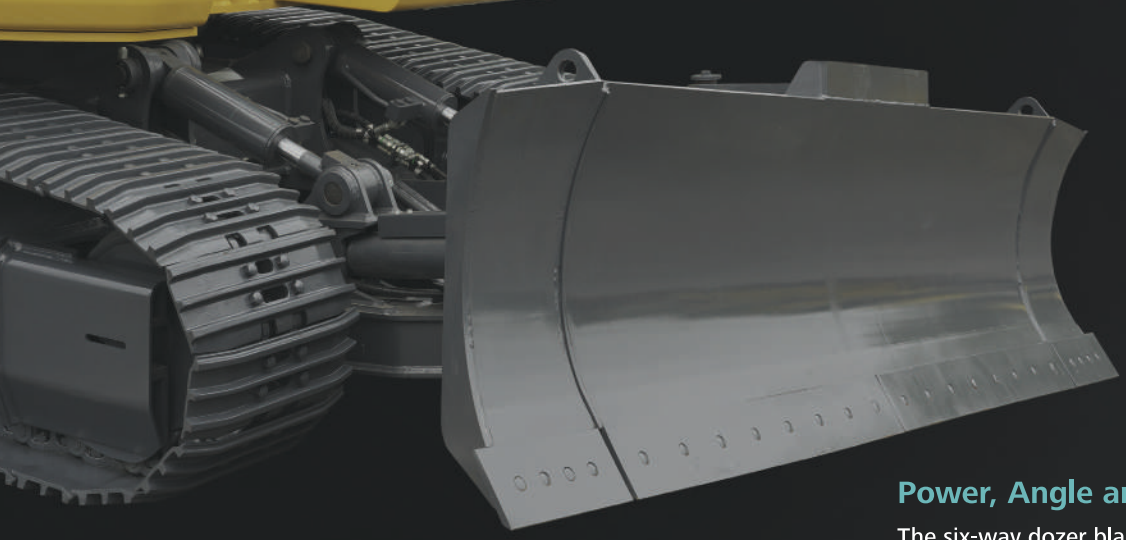



Power, Angle and Tilt Capability (PAT)

The six-way dozer blade has Power, Angle and Tilt capability (PAT) operated from the cab. With a single control lever, the blade can be angled 27 degrees to the left or right for dispensing earth and materials away for the operator's path. The blade also tilts up on the left and right sides by 17.5" {445 mm} for slope grading, culverts and ditches.

EXCEPTIONAL PERFORMANCE JUST GOT EVEN BETTER

KOBELCO Engines Comply with Tier IV Emissions Regulations

Our TIER IV Final compliant engine is fitted with a diesel oxidation catalyst (DOC) and an SCR device to control emissions without using a diesel particulate filter (DPF). It has a large-capacity DEF tank, extending intervals between fill-ups.

Our latest machines offer even more power than previous models, significantly reducing cycle times. Our engines achieve high performance—maintaining both durability and efficiency even when working at high power levels, lifting heavy loads, or traveling on steep grades.

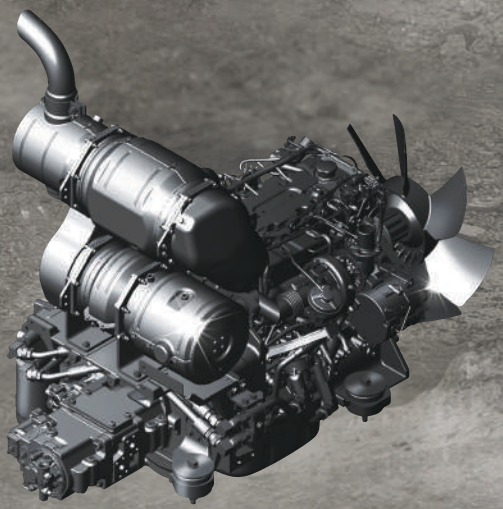

Model: ISUZU
4JJ1XDRAC-01

Engine Output

Increased ~10 %
(Compared to the ED160BR-5 model)

Digging Cycle Time

Reduced ~10 %
(Compared to the ED160BR-5 model)

Large Capacity Dozing

ED160 Blade Runner has the power to doze and backfill in all recommended operating positions.

Dimensions:
10′ 8″ { 3,260 mm } (width) x **31.9″ { 810 mm }** (height)

Working Ranges:
31.1″ { 790 mm } (height) x **23.6″ { 600 mm }** (depth)

Drawbar Pulling Force: **43,800 lbf { 195 kN }**

Dozer Capacity: **2.1 cu. yd. { 1.6 m^3 }**

Plenty of Ground Clearance

Excellent ground clearance ensures unhindered travel.

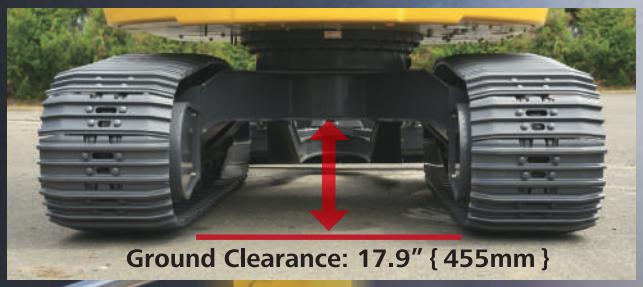

Ground Clearance: 17.9″ { 455mm }

View machine in operation



View the monitor in action

SAFETY ON FULL DISPLAY

Standard 3 Sides Safety Camera System

Our high-resolution, large display shows right, left and rear side camera together. Multiple display allows operator to customize viewing needs to enhance operator awareness and jobsite safety.

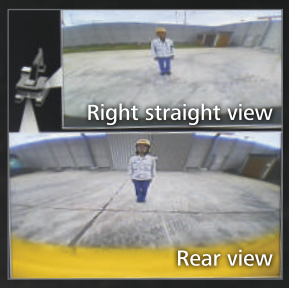

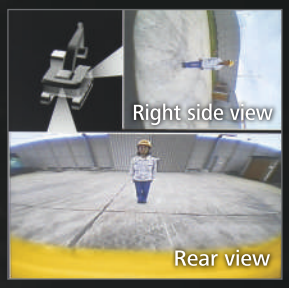



Large 10-Inch Monitor

The easy-to-operate menu screen and recognizable icons assist the operator to select the most important information needed to ensure jobsite safety and machine control.



Dial in the Right Information

Simply turn the jog dial to the right or left to select an operational feature, then press the dial to confirm selection.






KOBELCO

PREMIER OPERATOR COMFORTS

Air Ride Suspension Seat

A GRAMMER seat is installed as standard equipment, which achieves excellent shock absorption and superior ride comfort.

Multi Vent Air Conditioner

Cool air is blown from multiple outlets toward the operator's body for more comfortable operation.

Ergonomic Lever Angles

Operators can move levers horizontally without twisting their wrists, reducing fatigue.

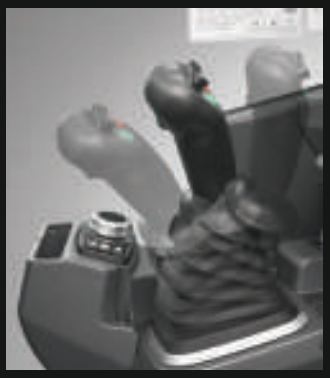

Adjustable Height Pilot Valves

Pilot valve height is manually adjustable to suit operator's preference.

LED Interior Light

Interior lights turn on and off automatically when the door is open or the ignition is turned to the OFF position. This ensures easy entry and exit in the dark.

Left Side Console

Flip up left console, with integrated pilot control lock lever,
tilts for easy entry and exit from the cab.



THE ULTIMATE IN SIMPLE DESIGN

In our pursuit of functional beauty and styling, we created an all new interior design focused with the operator in mind.

Jog Dial

This dial integrates multiple functions into a single, easy to use interface. Even with gloves on, the operator can make the adjustments they need.

LED Illumination

Dials and buttons are now backlit to provide a bright, clear view in any lighting condition.




REDIAL
MODE
DISP
MODE
AM/FM/AUX/USB/
View the interior
of the cab

ENHANCED MULTI-FUNCTION CAPABILITIES

Attachment Mode Selection

The flow-rate modes for the bucket, breaker, nibbler and thumb are all adjustable presets, allowing you to change tools quickly and easily. Mode settings for other attachments like the tilt rotator can be added or changed.





EASY MAINTENANCE



iNDr

A high-density, stainless steel mesh filter, blocks debris from clogging the machine's coolers while promoting easy clean out without tools. The ridges of the corrugated filter allow the air to pass through, and the grooves collect the dust, which prevents the filter from clogging.

iNDr Integrated Noise & Dust Reduction Cooling System

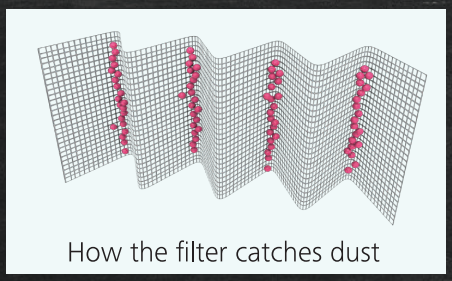

iNDr Filter

The corrugated design of the iNDr filter helps prevent the cooling system and air cleaner from clogging with dust while also reducing noise and maintenance to promote a cooler, more reliable hydraulics system and engine.



Standard FOPS overhead cab guard

The standard FOPS guard can be tilted open for easy window cleaning. Meets standard FOPS, Top Guard Level II requirements. (ISO10262)



Ground level storage compartment access

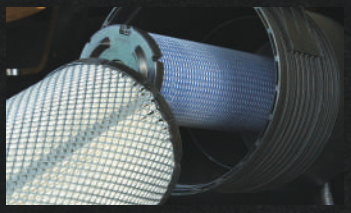

Two-stage air filter



Ground level DEF tank

SAFETY AND CONVENIENCE IN EVERY CORNER



Standard built-in rear, left and right side cameras



Swing flashers for a safer job site



Travel alarm



Quick coupler piping



Standard LED lights



Optional front-guard (mesh and bar)



Adjustable height pilot valves



Hands-free phone calls



USB charging port / 12 V power socket



Smartphone holder

STANDARD EQUIPMENT

ENGINE
- Engine, ISUZU 4JJ1XDRAC-01, diesel engine with turbocharger and intercooler, Tier IV Final certified
- Auto Idle Stop
- Automatic engine deceleration
- Batteries (2 x 12 V - 88 Ah)
- Starting motor (24 V - 4 kW), 50 amp alternator
- Engine oil pan drain valve
- Double element air cleaner

CONTROL
- Working mode selector (H-mode, S-mode and ECO-mode)

SWING SYSTEM & TRAVEL SYSTEM
- Swing rebound prevention system
- Independent travel
- Two-speed travel with automatic shift down
- Sealed & lubricated track links
- 23.6" {600 mm} track shoes
- Grease-type track adjusters
- Automatic swing brake
- Six-way dozer blade

MIRRORS, LIGHTS & CAMERAS
- Rear view mirrors, rear view camera and side view cameras
- Three LED front working lights
- Swing flashers
- Additional LED cab work lights

CAB & CONTROL
- Two control levers, pilot-operated
- Horn, electric
- Cab light (interior)
- Coat hook
- Large cup holder
- Detachable two-piece floor mat
- Air Ride Suspension seat
- Retractable 3-inch seatbelt
- Headrest
- Handrails
- Intermittent windshield wiper with double-spray washer
- Skylight
- Tinted safety glass
- Pull-type front window and removable lower front window
- Easy-to-read 10-inch LED SCREEN (Multi-display monitor)
- Automatic climate control
- Emergency escape hammer
- Radio, AM/FM stereo with speakers
- 12 V converter
- Hands-free telephone
- USB charging port
- Travel alarm
- Pattern changer
- Belly guard
- Lower swivel guard
- Quick coupler piping

OPTIONAL EQUIPMENT

- Front-guard (bar or mesh)
- Rotation hydraulic circuit
- N&B hydraulic circuit
- Boom and arm holding valve
- Additional counterweight
- Vandalism guards

Note: Standard and optional equipment may vary. Consult your KOBELCO dealer for specifics.

Specifications

Engine

Model	ISUZU 4JJ1XDRAC-01
Type	4 cycle, water cooled, overhead camshaft, vertical in-line direct injection type, with turbocharger, Tier IV Final certified
No. of cylinders	4
Bore and stroke	3.8" × 4.1" {95.4 mm × 104.9 mm}
Displacement	183 cu.in {2.999 L}
Power output	105 hp {78.6 kW} /2,200 rpm (SAE NET)
	115 hp {86 kW} /2,200 rpm (Without fan)
Engine rpm	2,200 rpm (Operation)
	2,000 rpm (Travel)
Max. torque	261 lb-ft {354 N·m} /1,800 rpm (SAE NET)
	277 lb-ft {357 N·m} /1,800 rpm (Without fan)

Hydraulic System

Pump	
Type	Two variable displacement piston pumps + two gear pumps
Max. discharge flow	2 × 38 gpm {2 × 142 L/min} 1 × 6 gpm {1 × 22 L/min} (Pilot) 1 × 17.7 gpm {67 L/min} (Dozer pump)
Relief valve setting	
Boom, arm and bucket	4,970 psi {34.3 MPa}
Travel circuit	4,970 psi {34.3 MPa}
Swing circuit	4,060 psi {28.0 MPa}
Dozer circuit	3,550 psi {24.5 MPa}
Control circuit	725 psi {5.0 MPa}
Oil cooler	Air cooled type

Swing System

Swing motor	One fixed displacement piston motor
Brake	Hydraulic; locking automatically when the swing control lever is in the neutral position
Parking brake	Wet multiple plate
Swing speed	11.0 rpm
Swing torque	29,800 lb-ft {40.4 kN·m}
Tail swing radius	4'11" {1,490 mm}
Min. front swing radius	8'3" {2,520 mm}

Hydraulic P.T.O.

Output specification	Maximum pressure psi {MPa}	Max. flow U.S. gpm, {lpm} (0 pressure)
		2,200 rpm
N&B	4,970 {34.3}	76.0 {284}
Rotary	2,970 {20.5}	17.4 {65.8}

Travel System

Travel motors	Variable displacement piston, two-speed motors
Travel brakes	Hydraulic brake
Parking brakes	Wet multiple plate
Travel shoes	40 each side
Travel speed	1.5 /3.0 mph {2.4 /4.8 km/h}
Drawbar pulling force	43,800 lbf {195 kN}
Gradeability	70% {35°}

Cab & Control

Cab
All-weather, sound-suppressed steel cab mounted on silicon-sealed viscous mounts and equipped with a heavy, insulated floor mat
Control
Two hand levers and two foot pedals for travel
Two hand levers for excavating and swing
Electric rotary-type engine throttle
Single handle dozer control for six-way moving

Boom, Arm & Bucket

Boom cylinders	3.9" {100 mm} × 3'7" {1,092 mm}
Arm cylinder	4.5" {115 mm} × 3'8" {1,116 mm}
Bucket cylinder	3.9" {100 mm} × 35.6" {903 mm}

Dozer Blade

Dozer cylinder	4.5" {114 mm} × 8.3" {210 mm}
Dimensions	10'8" {3,260 mm} (width) × 31.9" {810 mm} (height)
Working ranges	31.1" {790 mm} (up) × 23.6" {600 mm} (down)
Max. tilt height	17.5" {445 mm}
Angle	27 degrees

Refilling Capacities & Lubrications

Fuel tank	49.1 U.S.gal {186 L}
Cooling system	4.5 U.S.gal {17 L}
Engine oil	4.5 U.S.gal {17 L}
Travel reduction gear	2 × 1.3 U.S.gal {2 × 5.0 L}
Swing reduction gear	0.4 U.S.gal {1.65 L}
Hydraulic oil tank	23.7 U.S.gal {89.9 L}: Tank oil level
	50.2 U.S.gal {190 L}: Hydraulic system
DEF tank	5.5 U.S.gal {20.7 L}

Bucket Selection Chart

Bucket type	Bucket capacity cu.yd. (SAE) {m³}	Bucket width inches {m}	Bucket weight lb {kg}	Arm 9'4" {2.84 m}
General	0.30 {0.229}	18 {0.457}	650 {296}	H
	0.44 {0.336}	24 {0.609}	720 {327}	H
	0.58 {0.443}	30 {0.762}	835 {379}	M
	0.73 {0.558}	36 {0.914}	905 {411}	L
	0.88 {0.672}	42 {1.066}	1,015 {460}	L
Heavy duty	0.30 {0.229}	18 {0.457}	705 {320}	H
	0.44 {0.336}	24 {0.609}	780 {354}	H
	0.58 {0.443}	30 {0.762}	900 {408}	M
	0.73 {0.558}	36 {0.914}	975 {442}	L
	0.88 {0.672}	42 {1.066}	1,090 {494}	X

H – Used with material weight up to 3,000 lb/cu.yd. {1,780 kg/m³}
M – Used with material weight up to 2,500 lb/cu.yd. {1,483 kg/m³}
L – Used with material weight up to 2,000 lb/cu.yd. {1,186 kg/m³}
X – Not recommended

Working Ranges

Unit: ft-in {m}

Boom	15′4″ {4.68 m}
Arm / Range	9′4″ {2.84 m}
a- Max. digging reach	28′11″ {8.81}
b- Max. digging reach at ground level	28′3″ {8.62}
c- Max. digging depth	19′0″ {5.79}
d- Max. digging height	31′11″ {9.73}
e- Max. dumping clearance	23′11″ {7.30}
f- Min. dumping clearance	8′0″ {2.44}
g- Max. vertical wall digging depth	15′8″ {4.77}
h- Min. swing radius	8′3″ {2.52}
i- Horizontal digging stroke at ground level	15′5″ {4.71}
j- Digging depth for 8′ {2.4 m} flat bottom	18′4″ {5.60}

Digging Force (ISO 6015)

Unit: lb {kN}

Arm length		9′4″ {2.84 m}
Bucket digging force	SAE	21,900 {97.3}
	ISO	24,800 {110.4}
Arm crowding force	SAE	12,600 {56.2}
	ISO	13,000 {58.0}

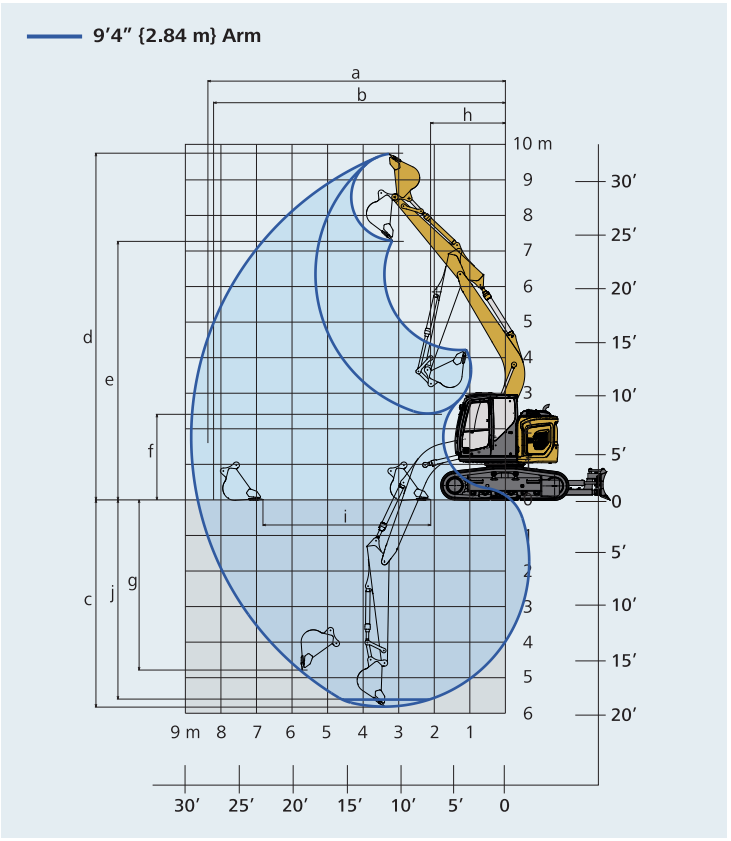

Dimensions

Unit: ft-in {mm}

Arm length		9′4″ {2.84 m}
A	Overall length	28′4″ {8,640}
B	Overall height (to top of boom)	10′5″ {3,180}
C	Overall width of crawler (23.6″ {600 mm} shoes)	8′6″ {2,590}
D	Overall height (to top of cab)	9′11″ {3,020}
E	Ground clearance of rear end*	3′5″ {1,030}
F	Ground clearance*	17.9″ {455}
G	Tail swing radius	4′11″ {1,490}
G′	Distance from center of swing to rear end	4′11″ {1,490}
H	Tumbler distance	9′2″ {2,800}
I	Overall length of crawler	11′10″ {3,600}
J	Track gauge	6′6″ {1,990}
K	Shoe width**	23.6″ {600}
L	Overall width of upperstructure	8′2″ {2,480}
M	Overall width (blade wings extended)	10′8″ {3,260}
N	Folding blade width	8′1″ {2,460}

*Without including height of shoe lug **Shoe width: 19.7″ {500 mm}

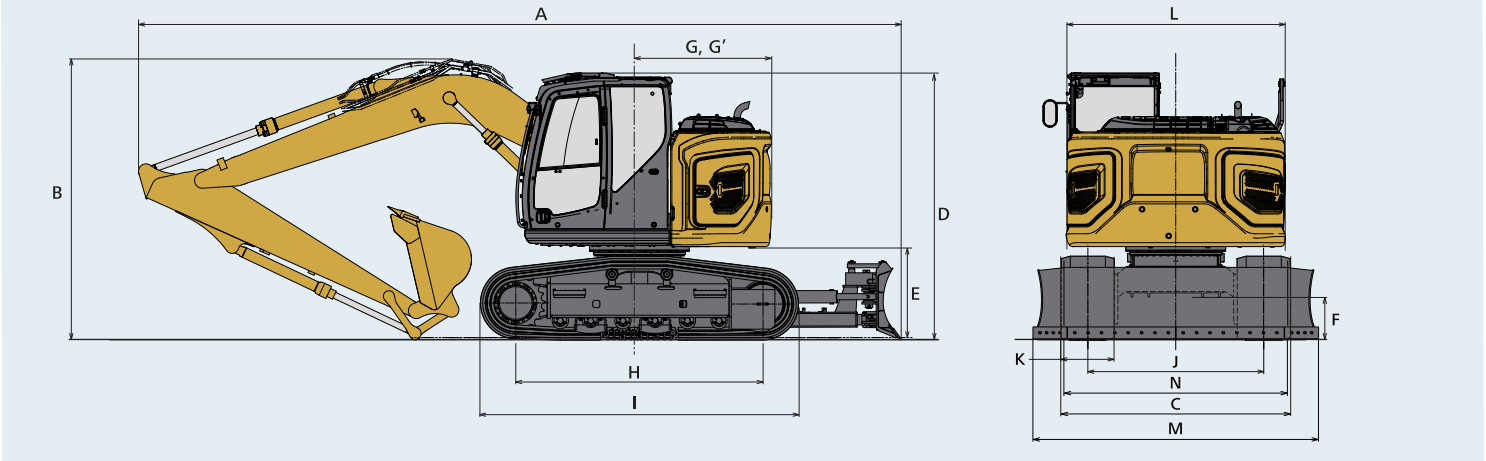

Operating Weight & Ground Pressure

In standard trim, with standard boom, arm, and 0.50 cu.yd. {0.38 m³} ISO heaped bucket

Shaped		Triple grouser shoes (even height)
Shoe width	ft-in {mm}	23.6″ {600}
Overall width of crawler	ft-in {mm}	8′6″ {2,590}
Ground pressure	psi {kPa}	6.5 {45}
Operating weight	lb {kg}	37,000 {16,800}

Lift Capacities

ED160 BLADE RUNNER

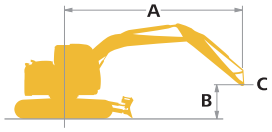

Rating over front

Rating over side or 360 degrees

A – Reach from swing centerline for arm top
B – Arm bucket pin height above/below ground
C – Lift point
Bucket: without
Relief valve setting: 4,970 psi {34.3 MPa}

ED160BR		Arm: 9′4″{2.84 m} Bucket: without Counterweight: 3,790 lb {1,720 kg} Shoe: 23.6″ {600 mm} Dozer: blade down										
A / B		5′ {1.5 m}		10′ {3.0 m}		15′ {4.6 m}		20′ {6.1 m}		At. max. reach		Radius
25′ {7.6 m}	lb {kg}					*5,070 {2,290}	*5,070 {2,290}			*4,510 {2,040}	*4,510 {2,040}	15′ 3″ {4.66 m}
20′ {6.1 m}	lb {kg}					*6,600 {2,990}	*6,600 {2,990}	*4,330 {1,960}	*4,330 {1,960}	*3,770 {1,710}	*3,770 {1,710}	20′ 2″ {6.16 m}
15′ {4.6 m}	lb {kg}					*7,350 {3,330}	*7,350 {3,330}	*6,920 {3,130}	5,000 {2,260}	*3,540 {1,600}	*3,540 {1,600}	23′ 0″ {7.02 m}
10′ {3.0 m}	lb {kg}			*12,860 {5,830}	*12,860 {5,830}	*9,110 {4,130}	7,470 {3,380}	*7,590 {3,440}	4,800 {2,170}	*3,540 {1,600}	3,420 {1,550}	24′ 6″ {7.47 m}
5′ {1.5 m}	lb {kg}			*17,080 {7,740}	12,390 {5,620}	*11,090 {5,030}	6,880 {3,120}	*8,430 {3,820}	4,540 {2,050}	*3,730 {1,690}	3,250 {1,470}	24′ 10″ {7.57 m}
G. L.	lb {kg}			*14,690 {6,660}	11,690 {5,300}	*12,240 {5,550}	6,470 {2,930}	*8,950 {4,050}	4,340 {1,960}	*4,170 {1,890}	3,320 {1,500}	24′ 1″ {7.36 m}
-5′ {-1.5 m}	lb {kg}	*10,870 {4,930}	*10,870 {4,930}	*18,310 {8,300}	11,610 {5,260}	*12,100 {5,480}	6,320 {2,860}	*8,670 {3,930}	4,260 {1,930}	*5,050 {2,290}	3,700 {1,670}	22′ 3″ {6.79 m}
-10′ {-3.0 m}	lb {kg}	*18,130 {8,220}	*18,130 {8,220}	*15,140 {6,860}	11,850 {5,370}	*10,270 {4,650}	6,410 {2,900}			*7,170 {3,250}	4,720 {2,140}	18′ 10″ {5.76 m}

ED160BR		Arm: 9′4″{2.84 m} Bucket: without Counterweight: 3,790 lb {1,720 kg} + 2,205 lb {1,000 kg} (Add-on) Shoe: 23.6″ {600 mm} Dozer: blade down										
A / B		5′ {1.5 m}		10′ {3.0 m}		15′ {4.6 m}		20′ {6.1 m}		At. max. reach		Radius
25′ {7.6 m}	lb {kg}					*5,070 {2,290}	*5,070 {2,290}			*4,510 {2,040}	*4,510 {2,040}	15′ 3″ {4.66 m}
20′ {6.1 m}	lb {kg}					*6,600 {2,990}	*6,600 {2,990}	*4,330 {1,960}	*4,330 {1,960}	*3,770 {1,710}	*3,770 {1,710}	20′ 2″ {6.16 m}
15′ {4.6 m}	lb {kg}					*7,350 {3,330}	*7,350 {3,330}	*6,920 {3,130}	5,860 {2,650}	*3,540 {1,600}	*3,540 {1,600}	23′ 0″ {7.02 m}
10′ {3.0 m}	lb {kg}			*12,860 {5,830}	*12,860 {5,830}	*9,110 {4,130}	8,700 {3,940}	*7,590 {3,440}	5,650 {2,560}	*3,540 {1,600}	*3,540 {1,600}	24′ 6″ {7.47 m}
5′ {1.5 m}	lb {kg}			*17,080 {7,740}	14,560 {6,600}	*11,090 {5,030}	8,100 {3,670}	*8,430 {3,820}	5,390 {2,440}	*3,730 {1,690}	*3,730 {1,690}	24′ 10″ {7.57 m}
G. L.	lb {kg}			*14,690 {6,660}	13,860 {6,280}	*12,240 {5,550}	7,690 {3,480}	*8,950 {4,050}	5,190 {2,350}	*4,170 {1,890}	4,000 {1,810}	24′ 1″ {7.36 m}
-5′ {-1.5 m}	lb {kg}	*10,870 {4,930}	*10,870 {4,930}	*18,310 {8,300}	13,780 {6,250}	*12,100 {5,480}	7,540 {3,420}	*8,670 {3,930}	5,110 {2,310}	*5,050 {2,290}	4,450 {2,010}	22′ 3″ {6.79 m}
-10′ {-3.0 m}	lb {kg}	*18,130 {8,220}	*18,130 {8,220}	*15,140 {6,860}	14,020 {6,350}	*10,270 {4,650}	7,640 {3,460}			*7,170 {3,250}	5,640 {2,550}	18′ 10″ {5.76 m}

1. Do not attempt to lift or hold any load that is greater than these lifting capacities at their specified lift point radius and heights. Weight of all accessories must be deducted from the above lifting capacities.
2. Lifting capacities are based on machine standing on level, firm, and uniform ground. User must make allowance for job conditions such as soft or uneven ground, out of level conditions, side loads, sudden stopping of loads, hazardous conditions, experience of personnel, etc.
3. Arm bucket pin is defined as lift point.
4. The above lift capacities are in compliance with ISO 10567. They do not exceed 87% of hydraulic lift capacity or 75% of tipping load. Lift capacities marked with an asterisk (*) are limited by hydraulic capacity rather than tipping load.
5. Operator should be fully acquainted with the Operator's and Maintenance Instructions before operating this machine. Rules for safe operation of equipment should be adhered to at all times.
6. Lifting capacities apply to only machines as originally manufactured and normally equipped by KOBELCO CONSTRUCTION MACHINERY CO., LTD.

Total Support for Machines with Network Speed and Accuracy

KOMEXS

KOMEXS is a telematics system for receiving machine information. Manage your machines anywhere in the world using the Internet. Location, workload and diagnostic data aid business operations.

Direct Access to Operational Status

Location Data
Accurate location data can be obtained even from sites where communications are difficult.

Fuel Consumption Data
Data on fuel consumption and idling times can be used to indicate improvements in fuel consumption.

Operating Hours
A comparison of operating times of machines at multiple locations shows which locations are busier and more profitable. Operating hours on site can be accurately recorded, for running time calculations needed for rental machines, etc.

Graph of Work Content
The graph shows how working hours are divided among different operating categories, including digging, idling, traveling, and optional operations (N&B).



Maintenance Data and Warning Alerts

Machine Maintenance Data
Provides maintenance status of separate machines operating at multiple sites. Maintenance data is also relayed to KOBELCO service personnel, for more efficient planning of periodic servicing.

Security System

Engine Start Alarm
Sends a notification if the engine is started outside of pre-defined hours.

Area Alarm
Sends a notification if the machine leaves a pre-defined area.

Note: This catalog may contain attachments and optional equipment that are not available in your area. And it may contain photographs of machines with specifications that differ from those of machines sold in your areas. Please consult your nearest KOBELCO distributor for those items you require. Due to our policy of continuous product improvements all designs and specifications are subject to change without advance notice.
Copyright by **KOBELCO CONSTRUCTION MACHINERY CO., LTD.** No part of this catalog may be reproduced in any manner without notice.

KOBELCO CONSTRUCTION MACHINERY U.S.A. INC.

www.KOBELCO-USA.com

Inquiries To:

KOBELCO is the corporate mark used by Kobe Steel on a variety of products and in the names of a number of Kobe Steel Group companies.

Bulletin No. ED160BR-7_NA_2E_2511