KOBELCO

Hydraulic Excavator

SK130LC SK130LC-11

Performance X Design

Bucket Capacity:

0.30 – 0.88 cu.yd. SAE

Engine Power:

96 hp {71.3 kW} @ 2,000 rpm
(SAE NET)

Operating Weight:

32,800 lb {14,900 kg}



DRIVEN BY PASSION

Complies with the latest exhaust emission regulations

US EPA Tier IV Final

EU (NRMM) Stage V

Japanese Regulations



PERFORMANCE BY DESIGN

The next generation of KOBELCO excavators bring together superior performance and thoughtful design like never before. Performance enhancements offer greater efficiency and productivity along with increased power and speed. Design improvements provide the ultimate in comfort and control.

KOBELCO refuses to compromise, creating machines that meet every challenge.


SK130LC

EXCEPTIONAL PERFORMANCE JUST GOT EVEN BETTER

KOBELCO engines comply with Tier IV emissions regulations

Our TIER IV Final compliant engine is fitted with a diesel oxidation catalyst (DOC) and an SCR device to control emissions without using a diesel particulate filter (DPF). It has a large-capacity DEF tank, extending intervals between fill-ups.

Our latest machines offer even more power than previous models, significantly reducing cycle times. Our engines achieve high performance—maintaining both durability and efficiency even when working at high power levels, lifting heavy loads, or traveling on steep grades.

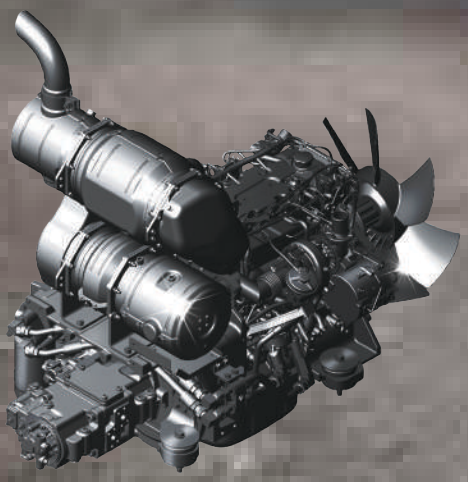

Model: ISUZU
4JJ1XDRAC-01

Engine Output

96 hp {71.3 kW}/2,000 rpm (SAE NET)


Lifting Capacity
8,220 lb
(Ground level over front @ 20')
Bucket Digging Force
21,900 lb
{97.3 kN} (SAE)
KOBELCO


KOBELCO
ECO
04:33
3 sides view
E
F
E
F
mode
AUTO
n/min
FLOW RATE
260 L/min

SAFETY ON FULL DISPLAY

Standard 3 Sides Safety Camera System

Our high-resolution, large display shows right, left and rear side camera together. Multiple display allows operator to customize viewing needs to enhance operator awareness and jobsite safety.

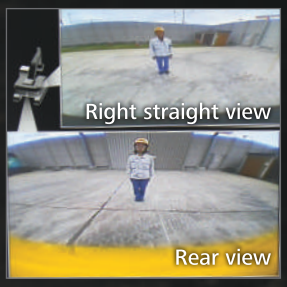

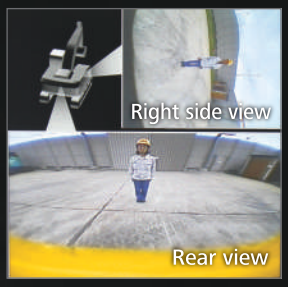



10-Inch Color Monitor Is the Largest in the Industry

The easy-to-operate menu screen and recognizable icons assist the operator to select the most important information needed to ensure jobsite safety and machine control.



Dial in the Right Information

Simply turn the jog dial to the right or left to select an operational feature, then press the dial to confirm selection.






KOBELCO

PREMIER OPERATOR COMFORTS

Air Ride Suspension Seat

A GRAMMER seat is installed as standard equipment, which achieves excellent shock absorption and superior ride comfort.

Multi Vent Air Conditioner

Cool air is blown from multiple outlets toward the operator's body for more comfortable operation.

Ergonomic Lever Angles

Operators can move levers horizontally without twisting their wrists, reducing fatigue.



Adjustable Height Pilot Valves

Pilot valve height is manually adjustable to suit operator's preference.

LED Interior Light

Interior lights turn on and off automatically when the door is open or the ignition is turned to the OFF position. This ensures easy entry and exit in the dark.

Left Side Console

Flip up left console, with integrated pilot control lock lever, tilts for easy entry and exit from the cab.



THE ULTIMATE IN SIMPLE DESIGN

In our pursuit of functional beauty and styling, we created an all new interior design focused with the operator in mind.

Jog Dial

This dial integrates multiple functions into a single, easy to use interface. Even with gloves on, the operator can make the adjustments they need.

LED Illumination

Dials and buttons are now backlit to provide a bright, clear view in any lighting condition.




REDIAL
MODE
DISP

ENHANCED MULTI-FUNCTION CAPABILITIES

Attachment Mode Selection

The flow-rate modes for the bucket, breaker, nibbler and thumb are all adjustable presets, allowing you to change tools quickly and easily. Mode settings for other attachments like the tilt rotator can be added or changed.



EASY MAINTENANCE





Standard FOPS overhead cab guard

The standard FOPS guard can be tilted open for easy window cleaning. Meets standard FOPS, Top Guard Level II requirements. (ISO10262)



Engine maintenance

A wide-opening engine bonnet enables to access the engine unit easily.



Two-stage air filter



DEF tank



Left side (radiator and cooling system elements)

Laid out for easy access to radiator and cooling system

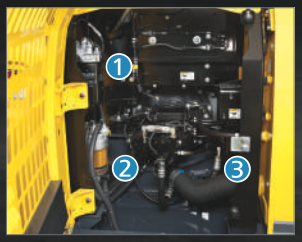

Right side



Fuel filter



Pre-filter with integrated water separator



Engine oil filter

SAFETY AND CONVENIENCE IN EVERY CORNER

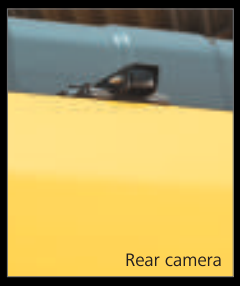

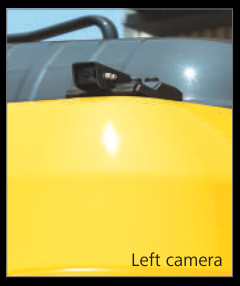

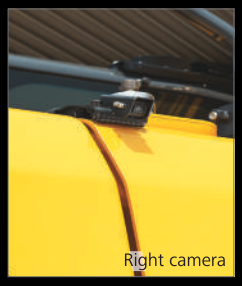

Standard rear, left and right side cameras



Swing flashers for a safer job site



Travel alarm

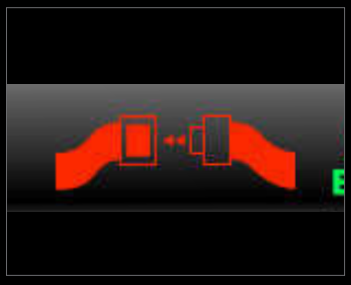

Seatbelt unfastened indicator





Standard LED lights

Bright LED lights ensure visibility even during night work



Optional front-guard (bar or mesh)



Adjustable height pilot valves

Operator can adjust height of attachment control levers



Hands-free phone calls



USB charging port / 12 V power socket



Smartphone holder

Includes USB port for charging



Large cup holder



Deck guard

Standard Equipment

ENGINE
- Engine, ISUZU 4JJ1XDRAC-01, diesel engine with turbocharger and intercooler, Tier IV Final certified
- Auto Idle Stop
- Automatic engine deceleration
- Batteries (2 x 12 V - 88 Ah)
- Starting motor (24 V - 4 kW)
- 50 amp alternator
- Engine oil pan drain valve
- Two-stage air filter

CONTROL
- Working mode selector (H-mode, S-mode and ECO-mode)

SWING SYSTEM & TRAVEL SYSTEM
- Swing rebound prevention system
- Swing flasher
- Straight propel system
- Two-speed travel with automatic shift down
- Automatic travel priority
- Sealed & lubricated track links
- 23.6" {600 mm} track shoes
- Grease-type track adjusters
- Automatic swing brake

MIRRORS, LIGHTS & CAMERAS
- Rear view mirrors, rear view camera and side view cameras
- Three LED front working lights

CAB & CONTROL
- Two control levers, pilot-operated
- Horn, electric
- Pattern changer
- LED door light (interior)
- Coat hook
- Large cup holder
- Detachable two-piece floor mat
- Air Ride Suspension seat
- Retractable 3-inch seatbelt
- Headrest
- Intermittent windshield wiper with double-spray washer
- Skylight
- Tiltable FOPS overhead cab guard (ISO 10262)
- Tinted safety glass
- Pull-type front window and removable lower front window
- Easy-to-read 10-inch LED SCREEN (Multi-display monitor)
- Automatic climate control
- Emergency escape hammer
- Radio (AUX & Bluetooth)
- 12 V converter
- Hands-free telephone
- USB charging port
- Travel alarm
- Lower swivel guard

Optional Equipment

- 19.7" {500 mm} steel track shoes
- 27.6" {700 mm} steel track shoes
- 7'10" {2.38 m} optional arm
- Front-guard (bar or mesh)
- Cab additional light
- Rain visor (may interfere with bucket action)
- N&B hydraulic circuit
- Rotate hydraulic circuit
- Boom and arm hose burst valve
- Dozer blade

Note: Standard and optional equipment may vary. Consult your KOBELCO dealer for specifics.

Total Support for Machines with Network Speed and Accuracy

KOMEXS is a telematics system for receiving machine information. Manage your machines anywhere in the world using the Internet. Location, workload and diagnostic data aid business operations.

Direct Access to Operational Status

Location Data
Accurate location data can be obtained even from sites where communications are difficult.

Fuel Consumption Data
Data on fuel consumption and idling times can be used to indicate improvements in fuel consumption.

Operating Hours
A comparison of operating times of machines at multiple locations shows which locations are busier and more profitable. Operating hours on site can be accurately recorded, for running time calculations needed for rental machines, etc.

Graph of Work Content
The graph shows how working hours are divided among different operating categories, including digging, idling, traveling, and optional operations (N&B).



Maintenance Data and Warning Alerts

Machine Maintenance Data
Provides maintenance status of separate machines operating at multiple sites. Maintenance data is also relayed to KOBELCO service personnel, for more efficient planning of periodic servicing.

Security System

Engine Start Alarm
Sends a notification if the engine is started outside of pre-defined hours.

Area Alarm
Sends a notification if the machine leaves a pre-defined area.

Specifications

Engine

Model	ISUZU 4JJ1XDRAC-01
Type	4-cycle, water cooled, overhead camshaft, vertical in-line direct injection type, with turbocharger, Tier IV Final certified
No. of cylinders	4
Bore and stroke	3.8″ × 4.1″ {95.4 mm × 104.9 mm}
Displacement	183 cu.in {2.999 L}
Power output	96 hp {71.3 kW} /2,000 rpm (SAE NET)
	105 hp {78.5 kW} /2,000 rpm (Without fan)
Max. torque	261 lb-ft {354 N·m} /1,800 rpm (SAE NET)
	277 lb-ft {357 N·m} /1,800 rpm (Without fan)

Hydraulic System

Pump	
Type	Two variable displacement piston pumps + one gear pump
Max. discharge flow	2 × 34 gpm {2 × 130 L/min}
	1 × 5 gpm {1 × 20 L/min}
Relief valve setting	
Boom, arm and bucket	4,970 psi {34.3 MPa}
Travel circuit	4,970 psi {34.3 MPa}
Swing circuit	4,060 psi {28.0 MPa}
Control circuit	725 psi {5.0 MPa}
Pilot control pump	Gear type
Main control valves	12-spool
Oil cooler	Air cooled type

Swing System

Swing motor	Axil piston motor
Brake	Hydraulic; locking automatically when the swing control lever is in the neutral position
Parking brake	Oil disc brake, hydraulic operated automatically
Swing speed	11.0 rpm
Swing torque	29,800 lb-ft {40.4 kN·m}
Tail swing radius	7′2″ {2,190 mm}
Min. front swing radius	9′4″ {2,840 mm}

Hydraulic P.T.O.

Output specification	Maximum pressure psi {MPa}	Max. flow U.S. gpm, {lpm} (0 pressure)
		2,000 rpm
N&B	3,550 {24.5}	34.3 {130}
Rotary	2,970 {20.5}	15.9 {60}

Travel System

Travel motors	Variable displacement piston, two-speed motors
Travel brakes	Hydraulic brake
Parking brakes	Wet multiple plate
Travel shoes	46 each side
Travel speed	2.1/3.5 mph {3.4/5.6 km/h}
Drawbar pulling force	31,700 lbf {141 kN}
Gradeability	70% {35°}

Cab & Control

Cab
All-weather, sound-suppressed steel cab mounted on silicon-sealed viscous mounts and equipped with a heavy, insulated floor mat
Control
Two hand levers and two foot pedals for travel
Two hand levers for excavating and swing
Electric rotary-type engine throttle

Boom, Arm & Bucket

Boom cylinders	3.9″ {100 mm} × 3′7″ {1,092 mm}
Arm cylinder	4.5″ {115 mm} × 3′8″ {1,116 mm}
Bucket cylinder	3.9″ {100 mm} × 35.6″ {903 mm}

Dozer Blade (Optional)

Dozer cylinder	4.9″ {125 mm} × 8.7″ {220 mm}
Dimension	8′6″ {2,590 mm} (width) × 22.4″ {570 mm} (height)
Working range	19.7″ {500 mm} (up) × 23.2″ {590 mm} (down)

Refilling Capacities & Lubrications

Fuel tank	74 U.S.gal {280 L}
Cooling system	4.2 U.S.gal {16 L}
Engine oil	4.5 U.S.gal {17 L}
Travel reduction gear	2 × 0.6 U.S.gal {2 × 2.1 L}
Swing reduction gear	0.4 U.S.gal {1.65 L}
Hydraulic oil tank	25.5 U.S.gal {96.7 L}: Tank oil level
	47.6 U.S.gal {180 L}: Hydraulic system
DEF tank	9.0 U.S.gal {33.9 L}

Bucket Selection Chart

Bucket type	Bucket capacity cu.yd. (SAE) {m³}	Bucket width inches {m}	Bucket weight lb {kg}	Arm ft-in {m}	
				7′10″ {2.38 m}	9′4″ {2.84 m}
General	0.30 {0.229}	18 {0.457}	650 {296}	H	H
	0.44 {0.336}	24 {0.609}	720 {327}	H	H
	0.58 {0.443}	30 {0.762}	835 {379}	M	M
	0.73 {0.558}	36 {0.914}	905 {411}	M	L
	0.88 {0.672}	42 {1.066}	1,015 {460}	L	L
Heavy duty	0.30 {0.229}	18 {0.457}	705 {320}	H	H
	0.44 {0.336}	24 {0.609}	780 {354}	H	H
	0.58 {0.443}	30 {0.762}	900 {408}	H	M
	0.73 {0.558}	36 {0.914}	975 {442}	L	L
	0.88 {0.672}	42 {1.066}	1,090 {494}	X	X

H – Used with material weight up to 3,000 lb/cu.yd. {1,780 kg/m³}
M – Used with material weight up to 2,500 lb/cu.yd. {1,483 kg/m³}
L – Used with material weight up to 2,000 lb/cu.yd. {1,186 kg/m³}
X – Not recommended

Working Ranges

Unit: ft-in {m}

Boom	15′4″ {4.68 m}	
Arm / Range	7′10″ {2.38 m}	9′4″ {2.84 m}
a-Max. digging reach	27′4″ {8.34}	28′10″ {8.78}
b-Max. digging reach at ground level	26′10″ {8.17}	28′3″ {8.62}
c- Max. digging depth	18′1″ {5.52}	19′7″ {5.98}
d-Max. digging height	27′9″ {8.45}	28′9″ {8.75}
e-Max. dumping clearance	19′11″ {6.08}	20′11″ {6.38}
f- Min. dumping clearance	7′6″ {2.28}	6′0″ {1.84}
g-Max. vertical wall digging depth	14′7″ {4.45}	16′1″ {4.91}
h-Min. swing radius	9′0″ {2.75}	9′4″ {2.84}
i- Horizontal digging stroke at ground level	13′9″ {4.20}	15′4″ {4.68}
j- Digging depth for 8′ {2.4 m} flat bottom	17′4″ {5.28}	18′11″ {5.77}

Digging Force (ISO 6015)

Unit: lb {kN}

Arm length		7′10″ {2.38 m}	9′4″ {2.84 m}
Bucket digging force	SAE	21,900 {97.3}	
	ISO	24,800 {110.4}	
Arm crowding force	SAE	13,800 {61.5}	12,600 {56.2}
	ISO	14,400 {64.2}	13,000 {58.0}

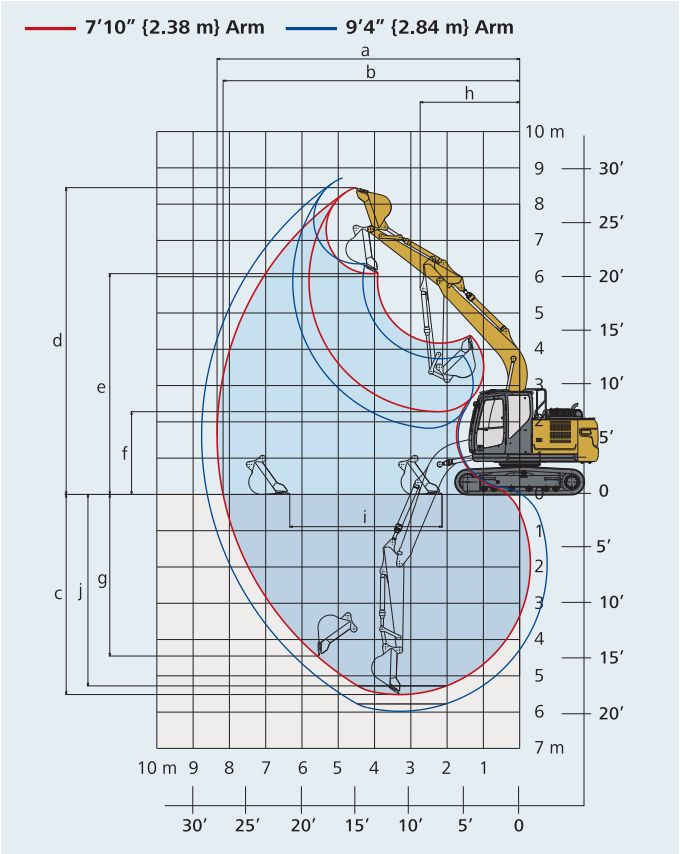

Dimensions

Unit: ft-in {mm}

Arm length		7′10″ {2.38 m}	9′4″ {2.84 m}
A	Overall length	25′6″ {7,770}	25′7″ {7,800}
B	Overall height (to top of boom)	9′1″ {2,770}	10′3″ {3,130}
C	Overall width (23.6″ {600 mm} shoes)	8′6″ {2,590}	
D	Overall height (to top of cab)	9′7″ {2,910}	
E	Ground clearance of rear end*	35.8″ {910}	
F	Ground clearance*	16.3″ {415}	
G	Tail swing radius	7′2″ {2,190}	
G′	Distance from center of swing to rear end	7′1″ {2,170}	

H	Tumbler distance	10′0″ {3,040}
I	Overall length of crawler	12′4″ {3,750}
J	Track gauge	6′6″ {1,990}
K	Shoe width**	23.6″ {600}
L	Overall width of upperstructure	8′6″ {2,590}

*Without including height of shoe lug **Shoe width: 19.7″ {500 mm}, 23.6″ {600 mm}, and 27.6″ {700 mm}

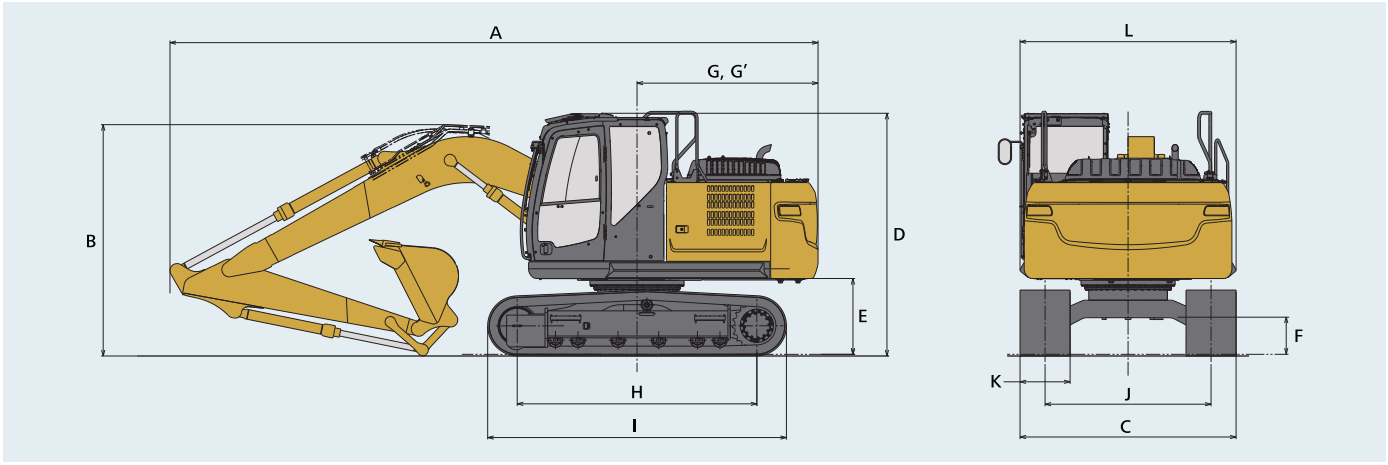

Operating Weight & Ground Pressure

In standard trim, with standard boom, 9′4″ {2.84 m} arm, and 0.50 cu.yd. {0.38 m³} ISO heaped bucket

Shaped		Triple grouser shoes (even height)		
Shoe width	ft-in {mm}	19.7″ {500}	23.6″ {600}	27.6″ {700}
Overall width of crawler	ft-in {mm}	8′2″ {2,490}	8′6″ {2,590}	8′10″ {2,690}
Ground pressure	psi {kPa}	6.2 {43}	5.4 {37}	4.6 {32}
Operating weight	lb {kg}	32,000 {14,500}	32,800 {14,900}	33,300 {15,100}

Lift Capacities

SK130LC
SK130LC-11

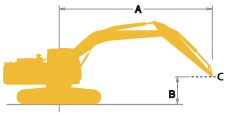

Rating over front

Rating over side or 360 degrees

A - Reach from swing centerline to arm top
B - Arm top height above/below ground
C - Lift point
Relief valve setting: 4,970 psi {34.3 MPa}

SK130LC		Arm: 9′4″ {2.84 m} No bucket Counterweight: 6,613 lb {3,000 kg} Shoe: 23.6″ {600 mm} Dozer: less										
A / B		5′ {1.5 m}		10′ {3.0 m}		15′ {4.6 m}		20′ {6.1 m}		At max. reach		Radius
25′ {7.6 m}	lb {kg}									*4,600 {2,080}	*4,600 {2,080}	14′7″{4.46 m}
20′ {6.1 m}	lb {kg}									*3,790 {1,710}	*3,790 {1,710}	19′10″{6.05 m}
15′ {4.6 m}	lb {kg}							*6,580 {2,980}	5,840 {2,640}	*3,520 {1,590}	*3,520 {1,590}	22′9″{6.94 m}
10′ {3.0 m}	lb {kg}			*11,270 {5,110}	*11,270 {5,110}	*8,410 {3,810}	*8,410 {3,810}	*7,330 {3,320}	5,640 {2,550}	*3,510 {1,590}	*3,510 {1,590}	24′4″{7.42 m}
5′ {1.5 m}	lb {kg}			*17,500 {7,930}	14,580 {6,610}	*10,780 {4,880}	8,110 {3,670}	*8,390 {3,800}	5,390 {2,440}	*3,680 {1,660}	*3,680 {1,660}	24′9″{7.55 m}
G.L.	lb {kg}			*14,760 {6,690}	13,790 {6,250}	*12,540 {5,680}	7,680 {3,480}	8,220 {3,720}	5,180 {2,340}	*4,090 {1,850}	3,980 {1,800}	24′2″{7.36 m}
–5′ {–1.5 m}	lb {kg}	*10,400 {4,710}	*10,400 {4,710}	*20,330 {9,220}	13,680 {6,200}	12,420 {5,630}	7,510 {3,400}	8,120 {3,680}	5,090 {2,300}	*4,930 {2,230}	4,400 {1,990}	22′4″{6.83 m}
–10′ {–3.0 m}	lb {kg}	*17,520 {7,940}	*17,520 {7,940}	*18,270 {8,280}	13,890 {6,300}	*12,140 {5,500}	7,580 {3,430}			*6,870 {3,110}	5,500 {2,490}	19′2″{5.84 m}
–15′ {–4.6 m}	lb {kg}			*12,700 {5,760}	*12,700 {5,760}					*8,830 {4,000}	*8,830 {4,000}	13′4″{4.08 m}

SK130LC		Arm: 7′10″ {2.38 m} No bucket Counterweight: 6,613 lb {3,000 kg} Shoe: 23.6″ {600 mm} Dozer: less										
A / B		5′ {1.5 m}		10′ {3.0 m}		15′ {4.6 m}		20′ {6.1 m}		At max. reach		Radius
20′ {6.1 m}	lb {kg}									*4,010 {1,810}	*4,010 {1,810}	17′11″{5.48 m}
15′ {4.6 m}	lb {kg}					*7,450 {3,370}	*7,450 {3,370}	*6,750 {3,060}	5,770 {2,610}	*3,700 {1,670}	*3,700 {1,670}	21′2″{6.46 m}
10′ {3.0 m}	lb {kg}			*13,380 {6,060}	*13,380 {6,060}	*9,320 {4,220}	8,590 {3,890}	*7,930 {3,590}	5,610 {2,540}	*3,680 {1,660}	*3,680 {1,660}	22′10″{6.97 m}
5′ {1.5 m}	lb {kg}			*13,180 {5,970}	*13,180 {5,970}	*11,520 {5,220}	8,040 {3,640}	8,440 {3,820}	5,390 {2,440}	*3,890 {1,760}	*3,890 {1,760}	23′4″{7.11 m}
G.L.	lb {kg}			*14,390 {6,520}	13,800 {6,250}	12,620 {5,720}	7,690 {3,480}	8,250 {3,740}	5,220 {2,360}	*4,390 {1,990}	*4,390 {1,990}	22′8″{6.91 m}
–5′ {–1.5 m}	lb {kg}	*12,130 {5,500}	*12,130 {5,500}	*19,900 {9,020}	13,830 {6,270}	12,510 {5,670}	7,590 {3,440}	8,220 {3,720}	5,190 {2,350}	*5,440 {2,460}	4,950 {2,240}	20′9″{6.33 m}
–10′ {–3.0 m}	lb {kg}	*20,830 {9,440}	*20,830 {9,440}	*17,090 {7,750}	14,140 {6,410}	*11,450 {5,190}	7,750 {3,510}			*8,220 {3,720}	6,480 {2,930}	17′2″{5.25 m}

SK130LC		Arm: 9′4″ {2.84 m} No bucket Counterweight: 6,613 lb {3,000 kg} Shoe: 23.6″ {600 mm} Dozer: Blade down										
A / B		5′ {1.5 m}		10′ {3.0 m}		15′ {4.6 m}		20′ {6.1 m}		At max. reach		Radius
25′ {7.6 m}	lb {kg}									*4,600 {2,080}	*4,600 {2,080}	14′7″{4.46 m}
20′ {6.1 m}	lb {kg}									*3,790 {1,710}	*3,790 {1,710}	19′10″{6.05 m}
15′ {4.6 m}	lb {kg}							*6,580 {2,980}	6,120 {2,770}	*3,520 {1,590}	*3,520 {1,590}	22′9″{6.94 m}
10′ {3.0 m}	lb {kg}			*11,270 {5,110}	*11,270 {5,110}	*8,410 {3,810}	*8,410 {3,810}	*7,330 {3,320}	5,930 {2,680}	*3,510 {1,590}	*3,510 {1,590}	24′4″{7.42 m}
5′ {1.5 m}	lb {kg}			*17,500 {7,930}	15,290 {6,930}	*10,780 {4,880}	8,520 {3,860}	*8,390 {3,800}	5,670 {2,570}	*3,680 {1,660}	*3,680 {1,660}	24′9″{7.55 m}
G.L.	lb {kg}			*14,760 {6,690}	14,510 {6,580}	*12,540 {5,680}	8,080 {3,660}	*9,280 {4,200}	5,460 {2,470}	*4,090 {1,850}	*4,090 {1,850}	24′2″{7.36 m}
–5′ {–1.5 m}	lb {kg}	*10,400 {4,710}	*10,400 {4,710}	*20,330 {9,220}	14,390 {6,520}	*13,110 {5,940}	7,910 {3,580}	*9,520 {4,310}	5,370 {2,430}	*4,930 {2,230}	4,640 {2,100}	22′4″{6.83 m}
–10′ {–3.0 m}	lb {kg}	*17,520 {7,940}	*17,520 {7,940}	*18,270 {8,280}	14,610 {6,620}	*12,140 {5,500}	7,990 {3,620}			*6,870 {3,110}	5,790 {2,620}	19′2″{5.84 m}
–15′ {–4.6 m}	lb {kg}			*12,700 {5,760}	*12,700 {5,760}					*8,830 {4,000}	*8,830 {4,000}	13′4″{4.08 m}

SK130LC		Arm: 7′10″ {2.38 m} No bucket Counterweight: 6,613 lb {3,000 kg} Shoe: 23.6″ {600 mm} Dozer: Blade down										
A / B		5′ {1.5 m}		10′ {3.0 m}		15′ {4.6 m}		20′ {6.1 m}		At max. reach		Radius
20′ {6.1 m}	lb {kg}									*4,010 {1,810}	*4,010 {1,810}	17′11″{5.48 m}
15′ {4.6 m}	lb {kg}					*7,450 {3,370}	*7,450 {3,370}	*6,750 {3,060}	6,060 {2,740}	*3,700 {1,670}	*3,700 {1,670}	21′2″{6.46 m}
10′ {3.0 m}	lb {kg}			*13,380 {6,060}	*13,380 {6,060}	*9,320 {4,220}	9,000 {4,080}	*7,930 {3,590}	5,890 {2,670}	*3,680 {1,660}	*3,680 {1,660}	22′10″{6.97 m}
5′ {1.5 m}	lb {kg}			*13,180 {5,970}	*13,180 {5,970}	*11,520 {5,220}	8,450 {3,830}	*8,860 {4,010}	5,670 {2,570}	*3,890 {1,760}	*3,890 {1,760}	23′4″{7.11 m}
G.L.	lb {kg}			*14,390 {6,520}	*14,390 {6,520}	*12,950 {5,870}	8,090 {3,660}	*9,560 {4,330}	5,500 {2,490}	*4,390 {1,990}	*4,390 {1,990}	22′8″{6.91 m}
–5′ {–1.5 m}	lb {kg}	*12,130 {5,500}	*12,130 {5,500}	*19,900 {9,020}	14,540 {6,590}	*13,110 {5,940}	8,000 {3,620}	*9,430 {4,270}	5,470 {2,480}	*5,440 {2,460}	5,220 {2,360}	20′9″{6.33 m}
–10′ {–3.0 m}	lb {kg}	*20,830 {9,440}	*20,830 {9,440}	*17,090 {7,750}	14,850 {6,730}	*11,450 {5,190}	8,160 {3,700}			*8,220 {3,720}	6,820 {3,090}	17′2″{5.25 m}

Note:
1. Do not attempt to lift or hold any load that is greater than these lift capacities at their specified lift point radius and heights. Weight of all accessories must be deducted from the above lift capacities.
2. Lift capacities are based on machine standing on level, firm, and uniform ground. User must make allowance for job conditions such as soft or uneven ground, out of level conditions, side loads, sudden stopping of loads, hazardous conditions, experience of personnel, etc.
3. Bucket pin attachment point defined as lift point.
4. The above lift capacities are in compliance with ISO 10567. They do not exceed 87% of hydraulic lift capacity or 75% of tipping load. Lift capacities marked with an asterisk(*) are limited by hydraulic capacity rather than tipping load.
5. Operator should be fully acquainted with the Operator's and Maintenance Instructions before operating this machine. Rules for safe operation of equipment should be adhered to at all times.
6. Lift capacities apply to only machine as originally manufactured and normally equipped by KOBELCO CONSTRUCTION MACHINERY CO., LTD.



Bringing KOBELCO quality to North America and the world

KOBELCO craftsmanship is based on 90 years of experience building excavators with advanced engineering practices and modern inspiration.
"Made by KOBELCO" guarantees quality around the world, overseen from our headquarters in Japan. Every KOBELCO excavator is built to the same exacting standards no matter where the excavator is produced.



In 1930, Kobe Steel manufactured Japan's first electric shovel, which was followed by the first hydraulic excavator in 1963. Since then, the KOBELCO brand has become known for groundbreaking machinery that excels at every task from civil engineering to recycling.



KOBELCO manufacturing is done in multiple production facilities around the world.
Since 2016, our plant in Moore, South Carolina has provided assembly, paint, and shipment lines to serve all of North America.

Note: This catalog may contain attachments and optional equipment that are not available in your area. And it may contain photographs of machines with specifications that differ from those of machines sold in your areas. Please consult your nearest KOBELCO distributor for those items you require. Due to our policy of continuous product improvements all designs and specifications are subject to change without advance notice.
Copyright by **KOBELCO CONSTRUCTION MACHINERY CO., LTD.** No part of this catalog may be reproduced in any manner without notice.

KOBELCO CONSTRUCTION MACHINERY U.S.A. INC.

22350 Merchants Way, Katy, TX 77449
Tel: 281-888-8430 Fax: 281-506-8713
www.KOBELCO-USA.com

KOBELCO is the corporate mark used by Kobe Steel on a variety of products and in the names of a number of Kobe Steel Group companies.

Inquiries To:

Bulletin No. SK130LC-11-NA-101-200200N