KOBELCO

DRIVEN BY PASSION

MINI EXCAVATORS SK17SR

■ **Bucket Capacity :**
1.41 cu.ft. (SAE)

■ **Engine Power :**
14.5 hp (10.8 kW)/2,400 rpm
(SAE NET)

■ **Operating Weight :**
3,681 lbs (1,610 kg)



SK17SR-6E

Compact, Tough Performer

Mini excavators are widely used at sites where space is limited, such as residential areas and industrial operations. Users want big power in a small machine, stable operation, rugged construction and durability to reduce downtime. The SK17SR combines a compact design with long digging reach for efficiency, maneuverability and durability to ensure a long working life.



Durability

Superior durability

The spring steel cylinder rod guard is standard for the bucket, boom and arm cylinder. The use of spring steel not only protects the cylinder rod, but gives resiliency to the guard itself.

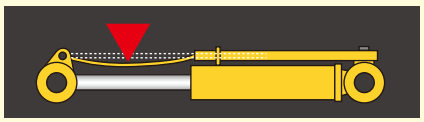

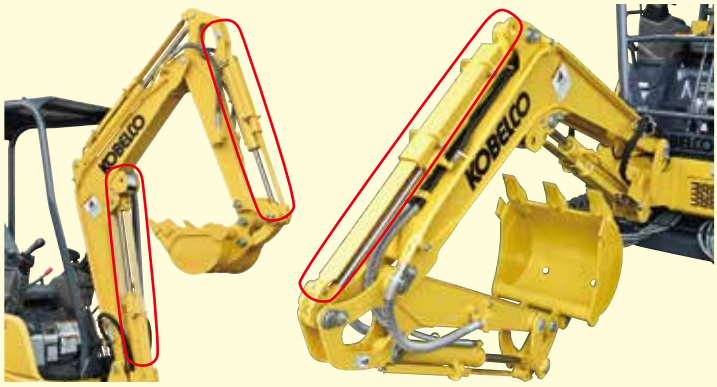

LED boom light

Work light is set under the boom, to minimize potential damage during operation.





Blade cutting edge

Backfill dozer blade has wear-resistant cutting edge.

Dozer cylinder rod guard

Dozer cylinder rod guard protects dozer cylinder from damage.



Side frames protector

The frame corners are reinforced with thick cast iron.
The side cover has thicker plate for higher resilience.



Compact

Ultra-small rear swing design with zero overhang

Tail swing radius overhang is 0 inches. With the crawler side frames fully extended, so you can work in tight places safely and efficiently.

Tail overhang :
0 inches



Self-cleaning retractable crawler frames

The hydraulic retractable side frames are strong and durable, as well as self cleaning. They retract to a narrow 37 inches for those tight areas, and extend to a solid 50 inches for stability.

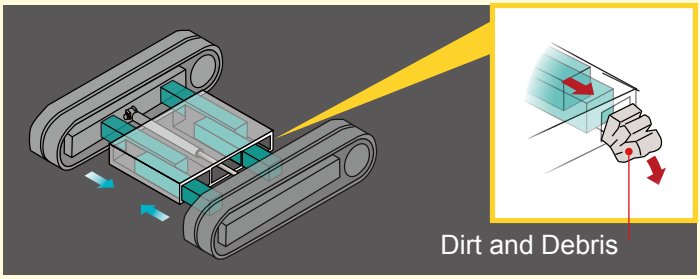

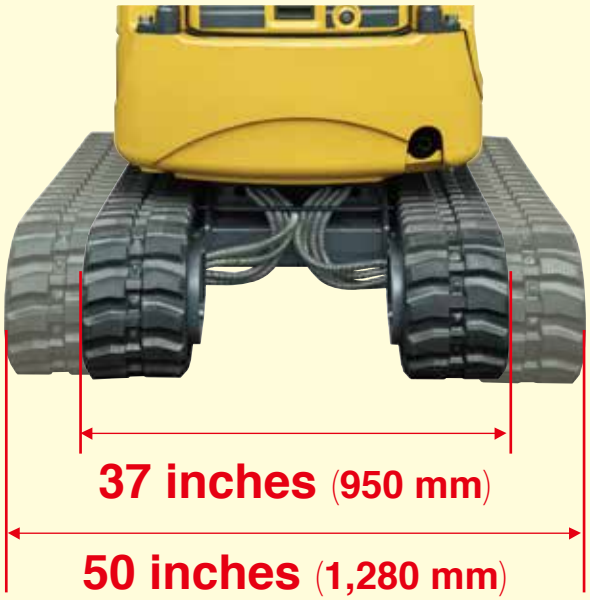

Excellent side ditch digging

During a right boom swing, the left front frame does not protrude outside the crawler shoes. So you can smoothly dig along walls.

No main frame over hang outside the crawler shoes.

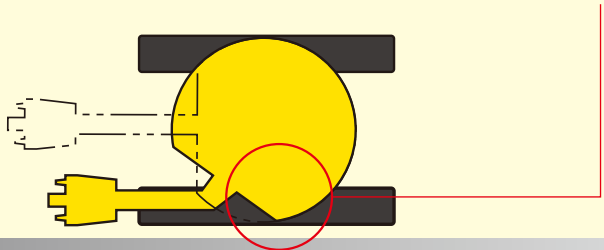

Front overhang : **0 inches** (During right boom swing)

Smaller front minimum swing radius

The front minimum swing radius is a small 4 feet, 6inches at full boom swing that allows for digging, swinging, and loading even in tight spots.

Min. swing radius :
4 feet 7 inch (1,390 mm)
at right full boom swing



Easy change of dozer blade width

Adapt to job conditions by changing the dozer blade width. The dozer blade wings fold in and out and are securely fastened with a retainer pin.

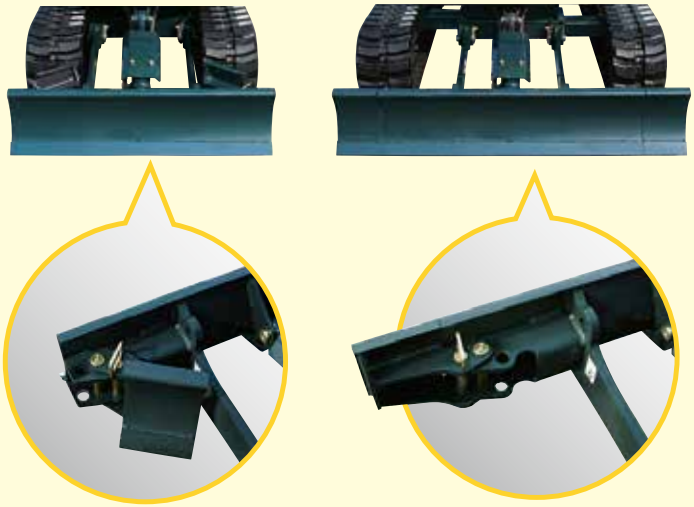

Performance

Digging depth at the top of its class

Digging depth of 7 feet, 3 inches puts it at the top of its class.

Max. digging depth :
7 feet 3 inches
(2,210 mm)

Reliable swing power, faster working speed

Powerful swing torque and a top-class swing speed deliver shorter cycle times.

Swing speed : **9.5 rpm**

Straight Travel

Straight Travel circuit allows you to drive in a line, even while operating the boom.

Comfort



Large travel pedals



Large travel pedals make operation easier and more comfortable.

Pass-through operating station



Pass-through operating station allows getting on and off from either side.

Wrist rests



Wrist rests fitted on each control box ensure comfortable operation.

Operator Safety

ROPS/FOPS Canopy

Meets international protection standards for greater operator safety.

ROPS: Roll-Over Protection System
FOPS: Falling-Object Protection System



Control lock levers

Raise the Control lock levers to lock the attachment, swing, swing the boom and drive the machine. As an added precaution, the engine won't start with the levers raised.



Maintenance

Front side

The fuel filler port is conveniently located in front of the right operating lever, making refueling easy.



Fuel filler port



Starter motor
Generator

Open the cover below the operator's seat to easily perform maintenance on the battery, starter motor and generator.

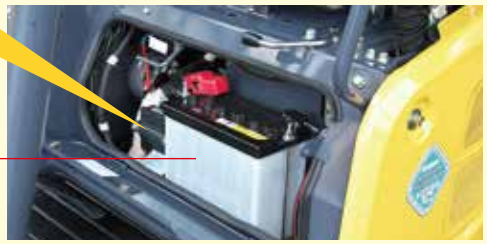

Battery

Rear side

Regular inspections are simply with the large, vertically opening hood.



Water separator

Engine oil filler port

Fuel filter

Air cleaner

Radiator over flow bottle

The arm cylinder hose and bucket cylinder hose are split at the back of the boom. There is no need to access the control valve to replace the hoses.



Fuel tank

Radiator

Left side

The cartridge return filter is easily replaced without getting your hands dirty.



Return filter

Lift Capacity

Excavator equipped with ROPS/FOPS and rubber crawlers

r : Reach from swing centerline from arm top: ft-in (mm)
h : Arm top height above/below ground: ft-in (mm)
w : Lift point: lbs (kg)

: Rated over front : Rated over side

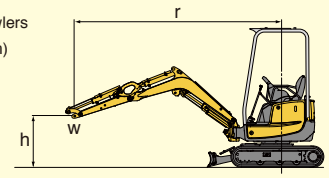

1. Do not attempt to lift or hold any load that is greater than these lift capacities at their specified lift point radius and heights. Weight of all accessories must be deducted from the above lift capacities.
2. Lift capacities are based on machine standing on level, firm, and uniform ground. User must make allowance for job conditions such as soft or uneven ground, out of level conditions, side loads, sudden stopping of loads, hazardous conditions, experience of personnel, etc.
3. Arm bucket pin is defined as lift point.
4. The below lift capacities are in compliance with SAE J/ISO 10567. They do not exceed 87% of hydraulic lift capacity or 75% of tipping load. Lift capacities marked with an asterisk (*) are limited by hydraulic capacity rather than tipping load.
5. Operator should be fully acquainted with the Operator's and Maintenance Instructions before operating this machine. Rules for safe operation of equipment should be adhered to at all times.
6. Lift capacities apply to only machines as normally equipped by KOBELCO CONSTRUCTION MACHINERY CO., LTD.

Lift Point Height	(r) Lift Radius·In. (mm)				(r) Lift Radius·In. (mm)				(r) Lift Radius·In. (mm)			
h:in (mm)	Rated Lift Capacity Over End Blade Down lbs (kg)				Rated Lift Capacity Over End Blade Up lbs (kg)				Rated Lift Capacity Over Side Blade Up lbs (kg)			
	78.7 (2,000)	98.5 (2,500)	Max	Radius : in (mm)	78.7 (2,000)	98.5 (2,500)	Max	Radius : in (mm)	78.7 (2,000)	98.5 (2,500)	Max	Radius : in (mm)
78.7 (2,000)		*705 (320)	*749 (340)	116.9 (2,970)		*705 (320)	507 (230)	116.9 (2,970)		*705 (320)	507 (230)	116.9 (2,970)
59.1 (1,500)	*925 (420)	*815 (370)	*771 (350)	125.2 (3,180)	*925 (420)	661 (300)	440 (200)	125.2 (3,180)	*925 (420)	*771 (350)	440 (200)	125.2 (3,180)
39.4 (1,000)	*1,300 (590)	*970 (440)	*771 (350)	128.7 (3,270)	947 (430)	661 (300)	440 (200)	128.7 (3,270)	903 (410)	639 (290)	418 (190)	128.7 (3,270)
19.7 (500)	*1,565 (710)	*1,102 (500)	*815 (370)	128.3 (3,260)	859 (390)	617 (280)	418 (190)	128.3 (3,260)	837 (380)	617 (280)	418 (190)	128.3 (3,260)
Ground (0)	*1,631 (740)	*1,168 (530)	*837 (380)	124.4 (3,160)	771 (350)	573 (260)	418 (190)	124.4 (3,160)	815 (370)	617 (280)	440 (200)	124.4 (3,160)
-19.7 (-500)	*1,587 (720)	*1,146 (520)	*881 (400)	115.7 (2,940)	771 (350)	551 (250)	440 (200)	115.7 (2,940)	793 (360)	595 (270)	485 (220)	115.7 (2,940)
-39.4 (-1,000)	*1,366 (620)	*970 (440)	*881 (400)	101.2 (2,570)	793 (360)	595 (270)	573 (260)	101.2 (2,570)	793 (360)	595 (270)	573 (260)	101.2 (2,570)

Dimensions

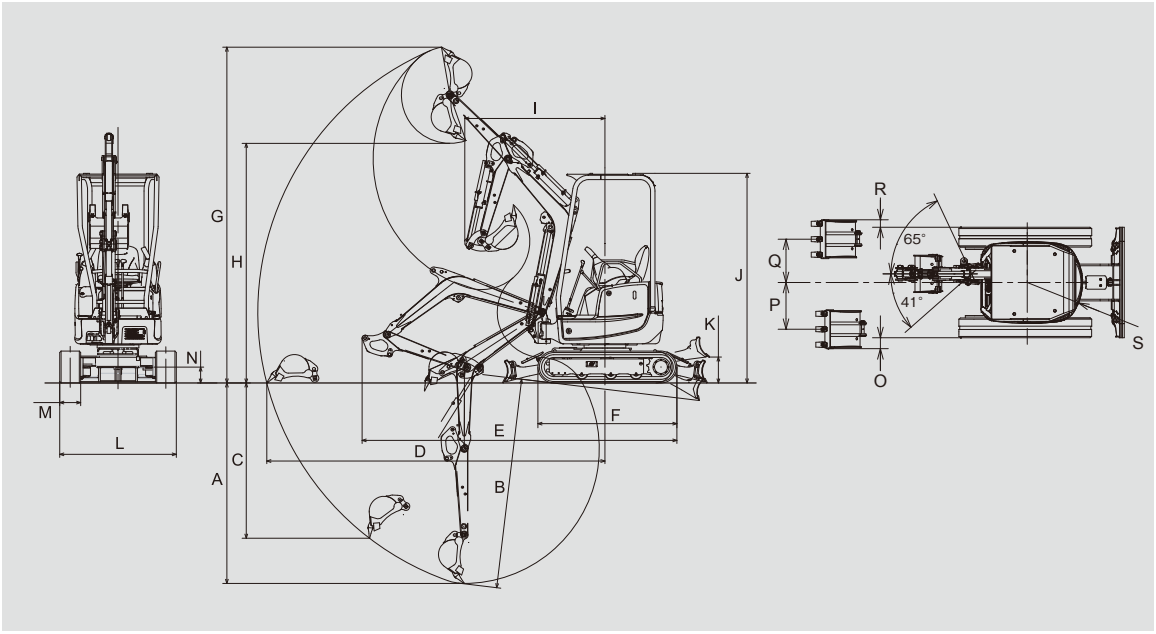

Unit:ft-in (mm)

	SK17SR
A	7'3" (2,210)
B	7'7" (2,310)
C	5'11" (1,800)
D	12'3" (3,730)
E	11'4" (3,460)
F	5'1" (1,540)
G	12'1" (3,690)
H	8'7" (2,620)
I	5'1" (1,540)
J	7'7" (2,320)
K	10" (265)
L	3'1" (950) 4'2" (1,280)
M	9" (230)
N	6" (165)
O	5" (125)
P	1'9" (540)
Q	1'8" (500)
R	3" (85)
S	2'1" (640)

Specifications

GENERAL			
MODEL			SK17SR
Type			SK17SR-6E
Machine Mass		lbs (kg)	3,681 (1,610)
Recommended Bucket Capacity		cu ft (m³)	1.41 (0.04)
Arm Length		ft-in (mm)	3'1" (950)
Bucket Digging Force (SAE J1179)		lbf (kN)	2,833 (12.6)
Bucket Digging Force (ISO 7451)		lbf (kN)	3,417 (15.2)
Arm Crowding Force (SAE J1179)		lbf (kN)	1,821 (8.1)
Arm Crowding Force (ISO 7451)		lbf (kN)	1,911 (8.5)
ENGINE			
Model			YANMAR 3TNV74F-SPBV
Type			Tier4 water-cooled 4-cycle 3-cylinder
Power Output	SAE NET	hp (kW)/rpm	14.5 (10.8)/2,400
	(Without Fan)	hp (kW)/rpm	15.0 (11.2)/2,400
Max. Torque	SAE NET	lbf (N·m)/rpm	36.3 (49.2)/1,800
	(Without Fan)	lbf (N·m)/rpm	37.0 (50.2)/1,800
Displacement		cu in (L)	61.0 (1.0)
Fuel Tank		U.S. gal (L)	5.2 (20)
HYDRAULIC SYSTEM			
Pump			Two variable displacement pumps + two gear pump"(one for pilot pump)
Max. Discharge Flow		U.S. gal (L)/min	2×4.6 (17.6), 1×3.5 (13.2), 1×2.0 (7.9)
Relief Valve Setting		psi (MPa)	5,975, 2,422, 420 (2×20.6, 16.7, 2.9)
Hydraulic Oil Tank (system)		U.S. gal (L)	4.4 (16.5) (6.9 (26))
TRAVEL SYSTEM			
Travel Motors			Orbit motor
Parking Brake			Hydraulic lock type
Travel Speed (high/low)		mph (km/h)	2.6 (4.2) / 1.3 (2.1)
Traction Force		lbf (kN)	4,114 (18.3)

CRAWLER			
Shoe Width		in (mm)	9 (230)
Ground Pressure		psi (kPa)	4.2 (29)
DOZER BLADE			
Width x Height		ft-in (mm)	4'2" (1,280) / 3'1" (950) × 10" (250)
Working Ranges (height/depth)		in (mm)	10" (265) / 8" (200)
SWING SYSTEM			
Swing Motor			Orbit motor
Parking Brake			Hydraulic lock type
Swing Speed		rpm	9.5
Tail Swing Radius		ft-in (mm)	2'1" (640)
Min. Front Swing Radius	Over the front	ft-in (mm)	5'1" (1,540)
	At full boom swing		4'7" (1,390)
MECHANISM			
Type			Boom swing
Offset Angle	To the left	degree	41
	To the right	degree	65

Hydraulic P.T.O

Model	SK17SR		
Output / Specifications	PSI (MPa)	US gal (L) / min	
		2,200 RPM	1,250 RPM
Combined flow, double action	2,417 (16,669)	8.1 (30.8)	4.6 (17.5)

STANDARD EQUIPMENT

- ROPS / FOPS canopy
- Rubber track
- N&B piping
- Travel alarm
- 2-way pattern changer

Note : This brochure may show attachments and optional equipment that is not available in your area. It may contain images of machines with specifications that differ from those sold in your area. Please consult your nearest KOBELCO distributor for items you require. Due to our policy of continuous product improvement, all designs and specifications are subject to change without advance notice.

Copyright by KOBELCO CONSTRUCTION MACHINERY CO., LTD. No part of this brochure may be reproduced in any manner without prior written permission.

KOBELCO CONSTRUCTION MACHINERY U.S.A. INC.

22350 Merchants Way
Katy, TX 77449
http://www.KOBELCO-USA.com/

Inquiries To: