KOBELCO

Performance X Design

Hydraulic Excavator

-11 SERIES

SK210LC

■ **Engine Power:**

160 hp {119 kW} @ 2,000 rpm
(SAE NET)

■ **Operating Weight:**

49,600 lb {22,500 kg}–58,400 lb {26,500 kg}



Complies with the latest exhaust emission regulations

US EPA Tier IV Final

Japanese Regulations



PERFORMANCE BY DESIGN

The next generation of KOBELCO excavators brings together superior performance and thoughtful design like never before. Performance enhancements offer greater efficiency and productivity along with increased speed. Design improvements provide the ultimate in comfort and control.

KOBELCO refuses to compromise by creating machines that meet every challenge.


4 YEAR
KO-PRO+
4,000 HOUR WARRANTY
+ KOMEXS
KOBELCO
SK210LC

EXCEPTIONAL PERFORMANCE JUST GOT EVEN BETTER

Higher Efficiency, Plus a Tier IV Final Compliant Engine

The new SK210LC is equipped with a Yanmar Tier IV Final compliant engine, which has a higher torque value. Superior balance between engine output and torque contributes to more efficient performance than the previous models. In addition, the DPF replacement interval has been extended.

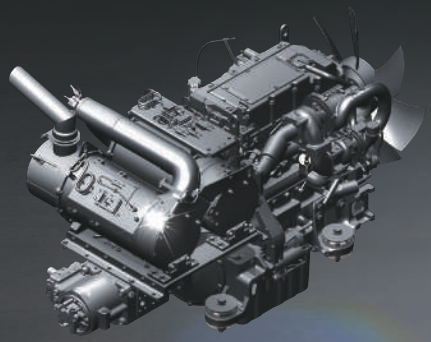

Model: YANMAR 4TN107FTT

Engine Output

160 hp {119 kw}/2,000 rpm (SAE NET)

Independent Travel

Selecting Independent Travel dedicates one hydraulic pump to travel and one to the attachment on a continuous basis, allowing for a smooth and constant movement speed even while swinging or using the boom or attachment. With Independent Travel, safely carrying a large pipe across a jobsite is a breeze.



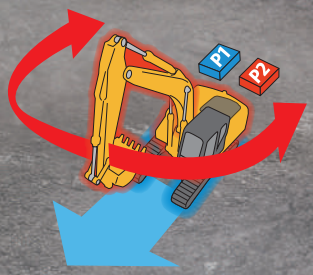

Lift Capacity

18,880 lb
{8,560 kg}

(High and Wide, 9'8" arm, heavy lift, ground level @ 20')

Bucket Digging Force

35,300 lb
{157 kN}

(9'8" arm with power boost engaged)




KOBELCO
04:33
SETTING MENU
PICTURE OF CAMERA
CLOCK SETTING
SCREEN BRIGHTNESS
MAINTENANCE
CONSUMPTION
LANGUAGE SELECTION
PR
PRESSURE RELEASE
E
F
E
F
mode
AUTO
n/min

SAFETY ON FULL DISPLAY

Standard 3 Sides Safety Camera System

Our high-resolution, large display shows right, left and rear side cameras together. Multiple display allows the operator to customize viewing needs to enhance operator awareness and jobsite safety.

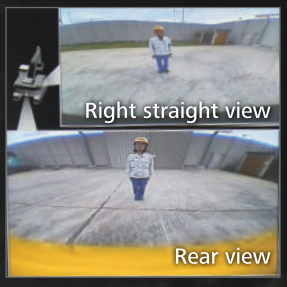





Large 10-Inch Color Monitor

The easy-to-operate menu screen and recognizable icons assist the operator to select the most important information needed to ensure jobsite safety and machine control.



Dial in the Right Information

Simply turn the jog dial to the right or left to select an operational feature, then press the dial to confirm selection.

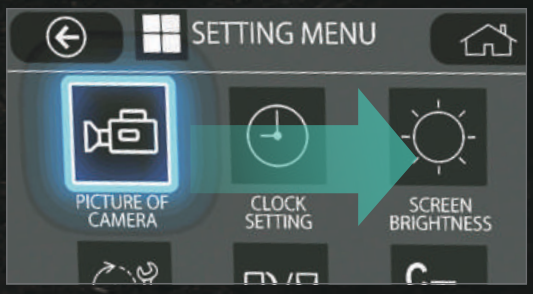




KOBELCO

PREMIER OPERATOR COMFORTS

Heated Air Ride Suspension Seat

A 7-way adjustable seat achieves excellent shock absorption and superior ride comfort.

Multi Vent Air Conditioner

Cool air is blown from multiple outlets toward the operator's body for more comfortable operation.

Ergonomic Lever Angles

Operators can move levers horizontally without twisting their wrists, reducing fatigue.



Adjustable Height Joysticks

Joystick height is manually adjustable to suit operator's preference.

LED Interior Light

Interior lights turn on and off automatically when the door is open or the ignition is turned to the OFF position. This ensures safe entry and exit in the dark.

Tilting Left Side Console

Flip-up left console with integrated pilot control lock lever tilts for easy entry and exit from the cab.



THE ULTIMATE IN SIMPLE DESIGN

In our pursuit of functional beauty and styling, we created an all new interior design focused with the operator in mind.

Jog Dial

This dial integrates multiple functions into a single, easy to use interface. Even with gloves on, the operator can make the adjustments they need.

LED Illumination

Dials and buttons are now backlit to provide a bright, clear view in any lighting condition.




REDIAL
MODE
DISP

GREATER MULTI-FUNCTION CAPABILITIES

Attachment Mode Selection

The auxiliary flow rates for the bucket, breaker, nibbler and thumb are all now adjustable by the operator through the monitor, allowing you to change tools quickly and easily. Mode settings for other attachments like the tilt rotator can be added or changed.



EASY MAINTENANCE



Standard Overhead Top Guard Level II

The standard overhead cab guard can be tilted open with gas damper for easy window cleaning. Meets standard top guard level II requirements. (ISO 10262)



Engine Maintenance

Lower service platform makes engine service easier.



Two-Stage Air Filter



DEF Tank

The DEF fill is located inside the locking tool box.



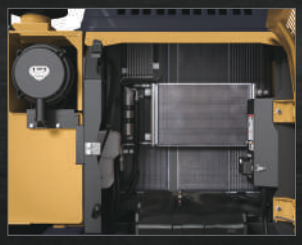

Left Side (Radiator and Cooling System Elements)

Laid out for easy access to radiator and cooling system with clean out screen.



Right Side (Ground Level Maintenance)

Hydraulic pump and engine filter compartment.

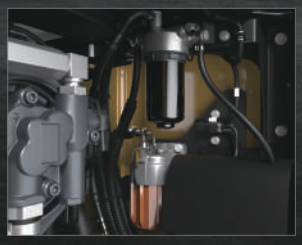

Fuel Filter / Pre-Filter with Integrated Water Separator



Engine Oil Filter

DURABILITY YOU CAN TRUST

Heavier Door Panels and Supports for Added Body Rigidity

Newly designed and reinforced rear right and left doors provide added protection for the radiator and pump compartments.





Angled Upper Deck Guards

Angled upper deck guards run along the side of the upper body to protect door panels from impact and damage.



Bucket Cylinder Rod Pin*

The increased diameter of the bucket cylinder rod pin contributes to enhanced durability for various types of attachments.

(Bucket pin dimensions have not changed from previous models.)

Total Support for Machines with Network Speed and Accuracy

KOMEXS is a telematics system for receiving machine information. Manage your machines anywhere in the world using the Internet. Location, workload and diagnostic data aid business operations.

Direct Access to Operational Status

Location Data

Accurate location data can be obtained even from sites where communications are difficult.

Fuel Consumption Data

Data on fuel consumption and idling times can be used to indicate improvements in fuel consumption.

Operating Hours

A comparison of operating times of machines at multiple locations shows which locations are busier and more profitable. Operating hours on site can be accurately recorded, for running time calculations needed for rental machines, etc.

Graph of Work Content

The graph shows how working hours are divided among different operating categories, including digging, idling, traveling, and optional operations (N&B).



Maintenance Data and Warning Alerts

Machine Maintenance Data

Provides maintenance status of separate machines operating at multiple sites. Maintenance data is also relayed to KOBELCO service personnel, for more efficient planning of periodic servicing.

Security System

Engine Start Alarm

Sends a notification if the engine is started outside of pre-defined hours.

Area Alarm

Sends a notification if the machine leaves a pre-defined area.

SAFETY AND CONVENIENCE IN EVERY CORNER



Standard Rear, Left and Right Side Cameras



Swing Flashers for a Safer Jobsite

Standard swing flashers notify ground workers that the machine is swinging.



Travel Alarm

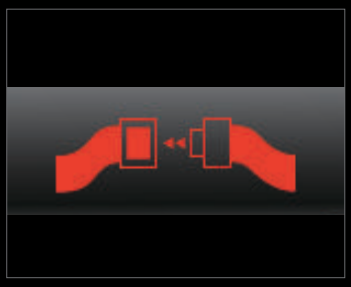

Seatbelt Unfastened Indicator on Monitor



Standard 7 LED Lights

Bright LED lights ensure visibility even during night work.



Wire Mesh or Vertical Bar Front Cab Guard (optional)



Battery Disconnect Switch with DEF Purge Notification Light

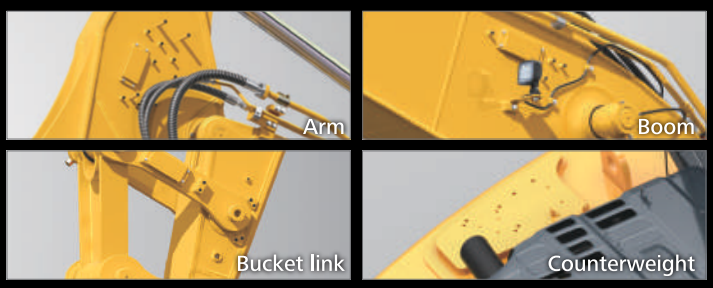

Machine Guidance Ready Brackets*

Pre-welded brackets for quicker and easier installation of Machine Guidance Systems.



Quick Coupler Piping*



Adjustable Height Joystick Consoles

The operator can adjust height of attachment control levers.



Hands-Free Bluetooth® Phone Calls



USB Charging Port / 12V Power Outlet



Smartphone Holder

Includes USB port for charging.

*not on long reach models.

Specifications

Engine

Model	YANMAR 4TN107FTT
Type	Direct injection, water-cooled, 4-cycle diesel engine with turbocharger, intercooler, Tier IV Final certified
No. of cylinders	4
Bore and stroke	4.2" × 5.0" {107 mm × 127 mm}
Displacement	278.7 cu.in {4.567 L}
Rated power output	160 hp {119 kW} /2,000 rpm (SAE NET)
	170 hp {127 kW} /2,000 rpm (Without fan)
Max. torque	577 lb-ft {783 N·m} /1,500 rpm (SAE NET)
	594 lb-ft {805 N·m} /1,500 rpm (Without fan)

Hydraulic System

Pump	
Type	Two variable displacement pumps + one gear pump
Max. discharge flow	2 × 58.1 gpm {2 × 220 L/min} 1 × 5.3 gpm {1 × 20 L/min}
Relief valve setting	
Boom, arm and bucket	4,970 psi {34.3 MPa}
Power Boost	5,480 psi {37.8 MPa}
Travel circuit	4,970 psi {34.3 MPa}
Swing circuit	4,210 psi {29.0 MPa}
Control circuit	725 psi {5.0 MPa}
Pilot control pump	Gear type
Main control valve	8-spool
Oil cooler	Air cooled type

Swing System

Swing motor	Axial piston motor
Brake	Hydraulic; locking automatically when the swing control lever is in neutral position
Parking brake	Oil disc brake, hydraulic operated automatically
Swing speed	12.7 rpm
Swing torque	52,740 lb-ft {71.5 kN·m}

Hydraulic P.T.O.

Output / Specification	Maximum pressure psi {MPa}	Max. flow U.S. gpm, {lpm} (0 pressure)
		2,000 rpm
Auxiliary	4,970 {34.3}	2 × 58.1 {2 × 220}
Rotation	2,990 {20.6}	10.7 {40.6}

Travel System

Travel motors	2 speed axial-piston with auto down shift
Parking brakes	Spring applied, hydraulic release
Travel shoes	49 each side
Travel speed (high/low)	3.7/2.2 mph {6.0/3.6 km/h}
Drawbar pulling force	51,300 lb {228 kN}
Gradeability	70% {35°}

Cab & Control

Cab
All-weather, sound-suppressed steel cab mounted on silicon-sealed viscous mounts and equipped with a heavy, insulated floor mat.
Control
Two hand levers and two foot pedals for travel
Two hand levers for excavating and swing
Electric rotary-type engine throttle
Proportional hand controlled auxiliary hydraulics

Boom, Arm & Bucket

Boom cylinders	4.7" {120 mm} × 4'5" {1,355 mm}
Arm cylinder	5.3" {135 mm} × 5'1" {1,558 mm}
Bucket cylinder	4.7" {120 mm} × 3'7" {1,080 mm}

Refilling Capacities & Lubrications

Fuel tank	84.5 U.S.gal {320 L}
Cooling system	6.1 U.S.gal {23 L}
Engine oil	5.3 U.S.gal {20 L}
Travel reduction gear	2 × 1.4 U.S.gal {5.3 L}
Swing reduction gear	0.7 U.S.gal {2.7 L}
Hydraulic oil tank	37.0 U.S.gal {140 L}: Tank oil level
	64.5 U.S.gal {244 L}: Hydraulic system
DEF tank	21.9 U.S.gal {83 L}

Operating Weight & Ground Pressure

In standard trim, with standard boom, 9'8" {2.94 m} arm, and 1.05 cu.yd. {0.8 m^3} ISO heaped bucket

Shaped		Triple grouser shoes (even height)		
Shoe width	ft-in {mm}	27.6" {700}	31.1" {790}	35.4" {900}
Overall width of crawler	ft-in {mm}	10'2" {3,090}	10'5" {3,180}	10'10" {3,290}
Ground pressure	psi {kPa}	5.7 {39}	5.2 {36}	4.5 {31}
Operating weight	lb {kg}	49,600 {22,500}	50,000 {22,700}	50,700 {23,000}

Working Ranges

Unit: ft-in {m}

Boom	18′6″ {5.65 m}	
Arm / Range	Standard 9′8″ {2.94 m}	Long 11′6″ {3.5 m}
a- Max. digging reach	32′6″ {9.90}	33′11″ {10.34}
b- Max. digging reach at ground level	31′11″ {9.73}	33′4″ {10.17}
c- Max. digging depth	22′0″ {6.70}	23′10″ {7.26}
d- Max. digging height	31′11″ {9.72}	32′0″ {9.75}
e- Max. dumping clearance	22′8″ {6.91}	22′10″ {6.97}
f- Min. dumping clearance	8′0″ {2.43}	6′2″ {1.87}
g- Max. vertical wall digging depth	20′0″ {6.10}	21′3″ {6.47}
h- Min. swing radius	11′8″ {3.55}	11′5″ {3.48}
i- Horizontal digging stroke at ground level	17′3″ {5.27}	19′11″ {6.08}
j- Digging depth for 8′ {2.4 m} flat bottom	21′5″ {6.52}	23′3″ {7.08}
Bucket capacity SAE heaped cu.yd. {m³}	1.05 {0.8}	0.92 {0.70}

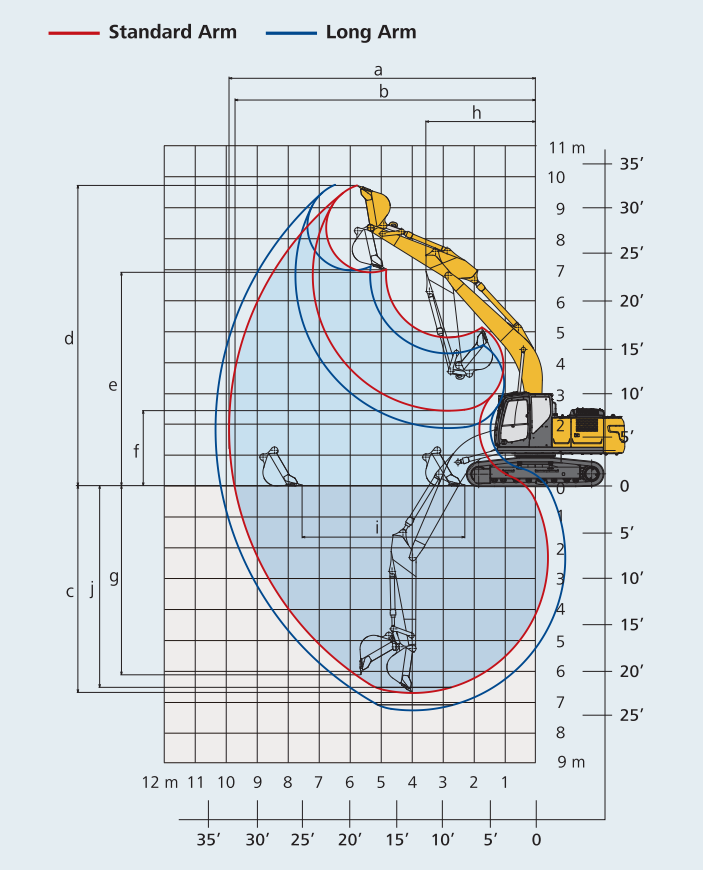

Digging Force (ISO 6015)

Unit: lb {kN}

Arm length		Standard 9′8″ {2.94 m}	Long 11′6″ {3.5 m}
Bucket digging force	SAE	29,330 {130} 32,190 {143}*	
	ISO	32,100 {143} 35,300 {157}*	
Arm crowding force	SAE	22,200 {98.8} 24,500 {109}*	20,100 {89.6} 22,100 {98.5}*
	ISO	22,900 {102} 25,200 {112}*	20,600 {91.8} 22,700 {101}*

*Power Boost engaged.

Dimensions

Unit: ft-in {mm}

Arm length		Standard 9′8″ {2.94 m}	Long 11′6″ {3.5 m}
A	Overall length	31′6″ {9,600}	31′9″ {9,670}
B	Overall height (to top of boom)*	9′9″ {2,980}	10′5″ {3,170}
C	Overall width**	10′5″ {3,180}	
D	Overall height (to top of cab)*	10′0″ {3,060}	
E	Ground clearance of rear end*	3′6″ {1,060}	
F	Ground clearance*	16.7″ {425}	

G	Tail swing radius	9′7″ {2,910}
G′	Distance from center of swing to rear end	9′6″ {2,900}
H	Tumbler distance	12′0″ {3,660}
I	Overall length of crawler	14′7″ {4,450}
J	Track gauge	7′10″ {2,390}
K	Shoe width	27.6″ {700}/31.1″ {790}/35.4″ {900}
L	Overall width of upperstructure	9′4″ {2,850}

*Without including height of shoe lug. **Shoe width: 31.1″ {790 mm}

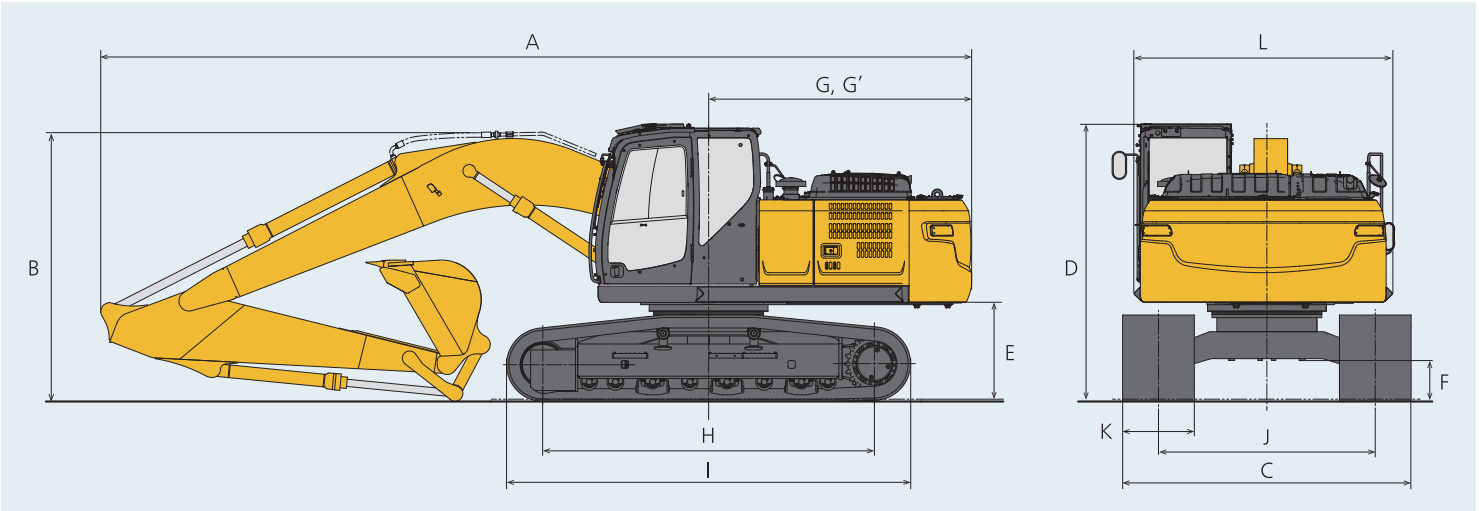

HIGH & WIDE



The High & Wide Specification is specially equipped for forestry and hilly terrain work.
The High & Wide Specification has the generous ground clearance needed to penetrate sites littered with stumps or rocks.
The extra crawler width ensures excellent stability, contributing to uninterrupted working and greater lifting capacity.
Durability is significantly improved with full track guides and larger upper rollers for the crawlers, to prevent de-tracking.
With double grouser shoes used for better grip, these machines are designed to work smoothly over the roughest ground.

Performance

Excellent Stability

Overall width of crawlers is greater than standard models, for dependable stability and improved lifting capacity.



Overall width of crawlers 10'11" (3,340 mm)

Generous ground clearance

Increased ground clearance over standard models for navigating rocky, forestry and swampy terrain.

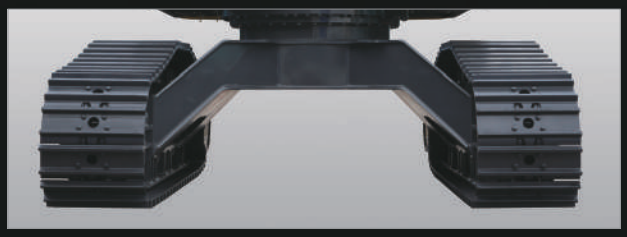

Ground clearance 30.5" (775 mm)

Durability

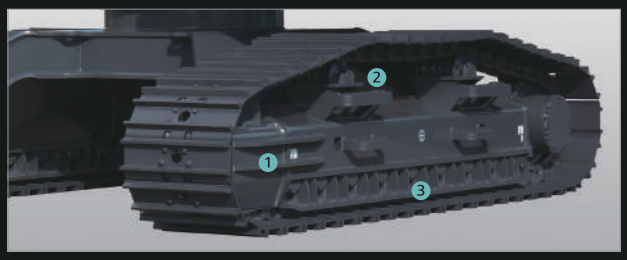

Unbeatable durability

The crawlers are designed to provide unbeatable durability to take on the harshest terrain. They feature full track guides to eliminate de-tracking concerns, a reinforced guide frame built to withstand heavy impact, and large, double-support, outer flanged upper rollers unfazed by powerful vibrations.



1 Reinforced guide frame



2 Large, double-support, outer flanged upper rollers



3 Hevy duty shoe (700 mm double bar grouser)

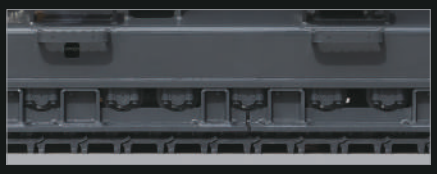

3 Full track guide

Operating Weight & Ground Pressure

In standard trim, with standard boom, 9'8" {2.94 m} arm, and 1.05 cu.yd. {0.8 m³} ISO heaped bucket

Shaped		Double grouser shoes (even height)	Triple grouser shoes (even height)	
Shoe width	ft-in {mm}	27.6" {700}	31.5" {800}	35.4" {900}
Overall width of crawler	ft-in {mm}	10'11" {3,340}	11'3" {3,440}	11'7" {3,540}
Ground pressure	psi {kPa}	6.6 {45.6}	5.9 {40.7}	5.3 {36.7}
Operating weight	lb {kg}	56,400 {25,600}	57,500 {26,100}	58,400 {26,500}

Working Ranges

Unit: ft-in {m}

Boom			18'6" {5.65 m}	
Range \ Arm			Standard 9'8" {2.94 m}	Long 11'6" {3.5 m}
a-	Max. digging reach		32'6" {9.90}	33'11" {10.34}
b-	Max. digging reach at ground level		31'8" {9.66}	33'2" {10.11}
c-	Max. digging depth		20'1" {6.36}	22'8" {6.92}
d-	Max. digging height		33'0" {10.07}	33'1" {10.09}
e-	Max. dumping clearance		23'9" {7.25}	24'0" {7.32}
f-	Min. dumping clearance		9'1" {2.78}	7'3" {2.22}
g-	Max. vertical wall digging depth		18'11" {5.76}	20'1" {6.12}
h-	Min. front swing radius		11'8" {3.55}	11'5" {3.48}
i-	Min. front swing length		11'7" {3.54}	11'5" {3.48}
j-	Height at min. swing radius		26'4" {8.03}	26'6" {8.07}
k-	Digging depth for 8' {2.4 m} flat bottom		20'3" {6.18}	22'1" {6.74}
l-	Horizontal digging stroke at ground level	stroke	17'6" {5.33}	20'3" {6.16}
m-		min.	7'1" {2.17}	5'10" {1.79}
Bucket capacity SAE heaped cu.yd. {m³}			1.05 {0.8}	0.92 {0.70}

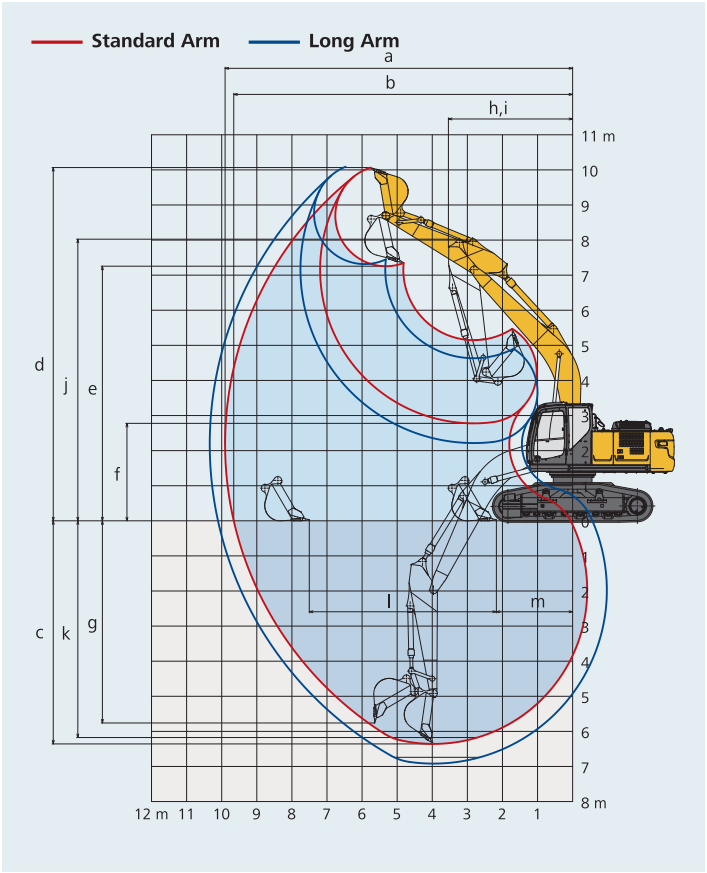

Digging Force (ISO 6015)

Unit: lb {kN}

Arm length		Standard 9'8" {2.94 m}	Long 11'6" {3.5 m}
Bucket digging force	SAE	29,200 {130} 32,100 {143}*	
	ISO	32,100 {143} 35,300 {157}*	
Arm crowding force	SAE	22,200 {98.8} 24,500 {109}*	20,100 {89.6} 22,100 {98.5}*
	ISO	22,900 {102} 25,200 {112}*	20,600 {91.8} 22,700 {101}*

*Power Boost engaged.

Dimensions

Unit: ft-in {mm}

Arm length		Standard 9'8" {2.94 m}	Long 11'6" {3.5 m}
A	Overall length	31'0" {9,450}	31'3" {9,530}
B	Overall height (to top of boom)*	10'6" {3,200}	10'8" {3,250}
C	Overall width**	10'11" {3,340}	
D	Overall height (to top of cab)*	11'3" {3,420}	
E	Ground clearance of rear end*	4'8" {1,410}	
F	Ground clearance*	30.5" {775}	

G	Tail swing radius	9'7" {2,910}
G'	Distance from center of swing to rear end	9'6" {2,900}
H	Tumbler distance	12'1" {3,690}
I	Overall length of crawler	15'0" {4,580}
J	Track gauge	8'66" {2,640}
K	Shoe width	27.6" {700}/31.5" {800}/35.4" {900}
L	Overall width of upperstructure	9'4" {2,850}

*Without including height of shoe lug. **Shoe width: 27.6" {700 mm}

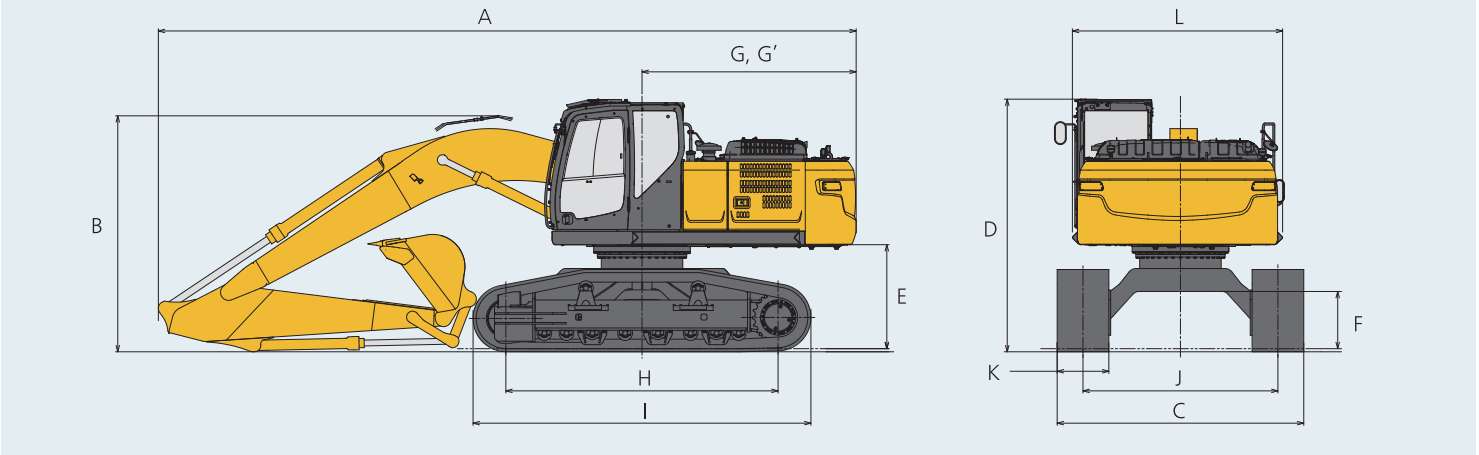

LONG REACH

The long reach attachment is suited for working sites that need a large working range for works such as dredging, slope finishing, and handling soil from an underground.



Max. digging reach

51'11"
{15,820 mm}

Operating Weight & Ground Pressure

In standard trim, with 28'8" {8.75 m} boom and 20'10" {6.35 m} arm,
and 0.64 cu.yd. {0.49m³} ditching bucket weighing 860 lbs {390kg} with 2,000 lb/yd {1,190kg/m³} material

Shaped		Triple grouser shoes (even height)		
Shoe width	ft-in {mm}	27.6" {700}	31.1" {790}	35.4" {900}
Overall width of crawler	ft-in {mm}	10'2" {3,090}	10'5" {3,180}	10'10" {3,290}
Ground pressure	psi {kPa}	6.2 {42.7}	5.5 {38.2}	4.9 {33.9}
Operating weight	lb {kg}	52,900 {24,000}	53,400 {24,200}	54,000 {24,500}

Working Ranges

Unit: ft-in {m}

Boom		28'8" {8.75m}
Arm / Range		20'10" {6.35m}
a- Max. digging reach		51'11" {15.82}
b- Max. digging reach at ground level		51'7" {15.71}
c- Max. digging depth		39'5" {12.01}
d- Max. digging height		45'7" {13.90}
e- Max. dumping clearance		37'10" {11.53}
f- Min. dumping clearance		6'10" {2.08}
g- Max. vertical wall digging depth		36'9" {11.19}
h- Min. front swing radius		15'6" {4.73}
i- Min. front swing length		15'6" {4.72}
j- Height at min. swing radius		34'6" {10.52}
k- Digging depth for 8' {2.4 m} flat bottom		39'1" {11.91}
l- Horizontal digging stroke at ground level	stroke	38'1" {11.61}
m-	min.	7'3" {2.20}
Bucket capacity SAE heaped cu.yd. {m³}		0.64 {0.49}

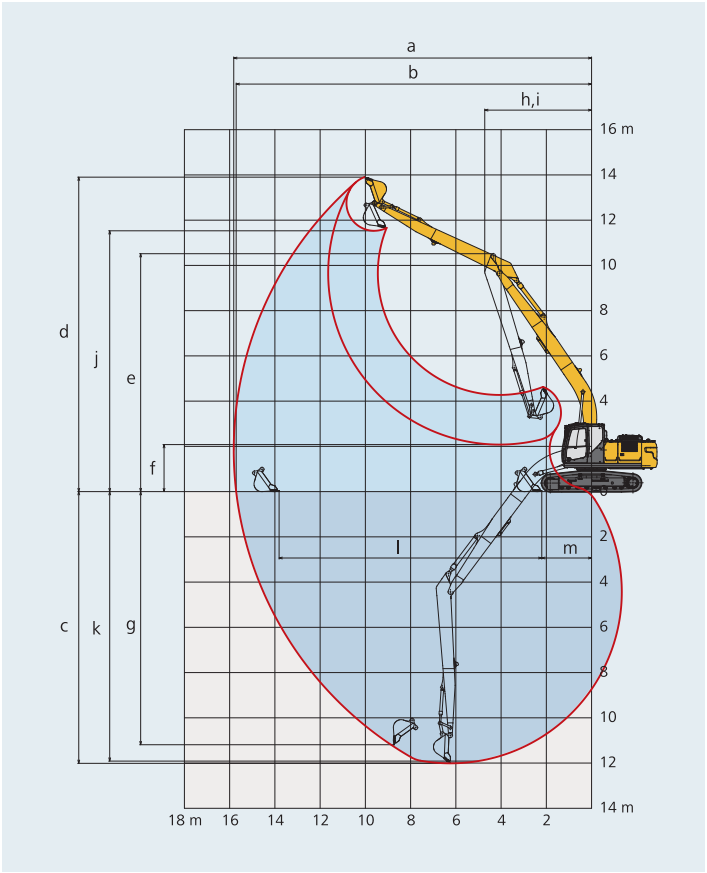

Digging Force (ISO 6015)

Unit: lb {kN}

Arm length		20'10" {6.35m}
Bucket digging force	SAE	17,800{79}
	ISO	19,800{88}
Arm crowding force	SAE	11,900{53.1}
	ISO	12,100{53.7}

Boom, Arm & Bucket

bore x stroke ft-in {mm}

Boom cylinders	4.7" {120} x 4'5" {1,355}
Arm cylinder	5.3" {135} x 4'11" {1,489}
Bucket cylinder	4.4" {111} x 34.8" {885}

Dimensions

Unit: ft-in {mm}

Arm length		20'10" {6.35m}
A	Overall length	41'8" {12,690}
B	Overall height (to top of boom)*	10'3" {3,120}
C	Overall width**	10'5" {3,180}
D	Overall height (to top of cab)*	10'0" {3,060}
E	Ground clearance of rear end*	3'6" {1,060}
F	Ground clearance*	16.7" {425}

G	Tail swing radius	9'7" {2,910}
G'	Distance from center of swing to rear end	9'6" {2,900}
H	Tumbler distance	12'0" {3,660}
I	Overall length of crawler	14'7" {4,450}
J	Track gauge	7'10" {2,390}
K	Shoe width	27.6" {700}/31.1" {790}/ 35.4" {900}
L	Overall width of upperstructure	9'4" {2,850}

*Without including height of shoe lug. **Shoe width: 31.1" {790 mm}

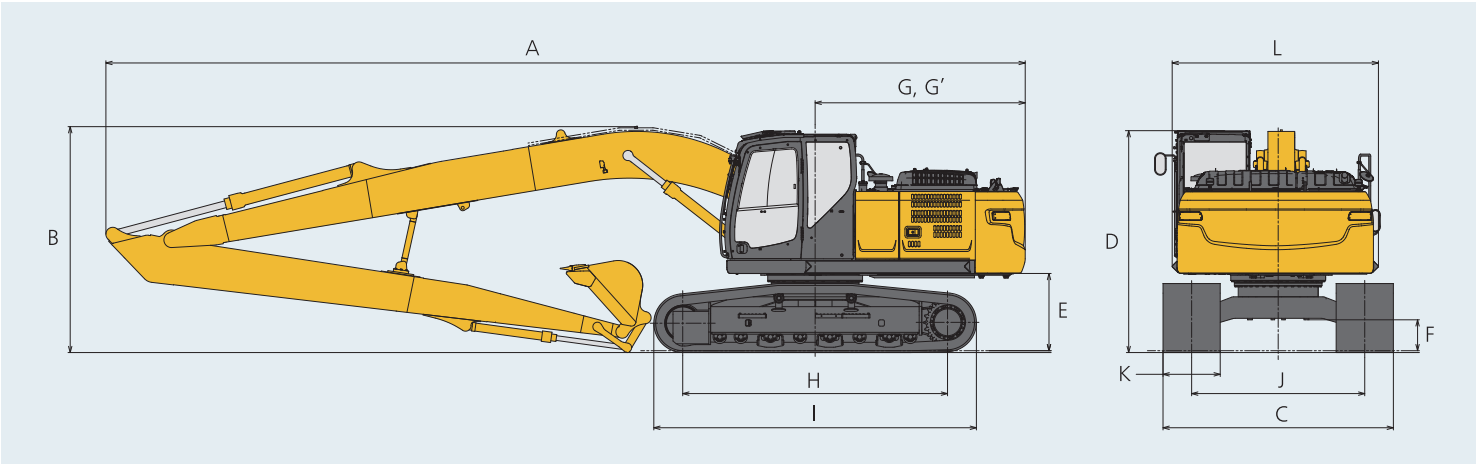

Lift Capacities

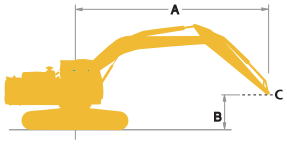

Rating over front

Rating over side or 360 degrees

A - Reach from swing centerline to arm tip
B - Arm tip height above/below ground
C - Lift point {kg}
Relief valve setting: 4,970 psi {34.3 MPa}
Relief valve setting {Heavy Lift}: 5,480 psi {37.8 MPa}

STANDARD MACHINE

SK210LC Standard arm	Boom: 18'6" {5.65 m} Arm: 9'8" {2.94 m} Without bucket: counterweight: 9,480 lb {4,300 kg} Shoe: 31.1" {790 mm} (Heavy Lift)												
A / B	5' {1.5 m}		10' {3.0 m}		15' {4.6 m}		20' {6.1 m}		25' {7.6 m}		At max. reach		
													Radius
25' {7.6 m}	lb {kg}							*10,170 {4,610}	*10,170 {4,610}			*9,560 {4,330}	*9,560 {4,330}	20'2" {6.15 m}
20' {6.1 m}	lb {kg}							*13,050 {5,910}	12,270 {5,560}			*8,790 {3,980}	*8,790 {3,980}	23'11" {7.30 m}
15' {4.6 m}	lb {kg}							*14,150 {6,410}	11,900 {5,390}	*12,770 {5,790}	8,350 {3,780}	*8,580 {3,890}	7,660 {3,470}	26'3" {8.01 m}
10' {3.0 m}	lb {kg}			*26,180 {11,870}	*26,180 {11,870}	*20,400 {9,250}	17,310 {7,850}	*15,980 {7,240}	11,330 {5,130}	12,530 {5,680}	8,110 {3,670}	*8,730 {3,950}	6,980 {3,160}	27'5" {8.37 m}
5' {1.5 m}	lb {kg}					*24,130 {10,940}	16,120 {7,310}	17,110 {7,760}	10,760 {4,880}	12,240 {5,550}	7,840 {3,550}	*9,250 {4,190}	6,740 {3,050}	27'8" {8.45 m}
G.L.	lb {kg}			*14,640 {6,640}	*14,640 {6,640}	*25,910 {11,750}	15,460 {7,010}	16,660 {7,550}	10,370 {4,700}	12,020 {5,450}	7,650 {3,460}	*10,230 {4,640}	6,870 {3,110}	27'0" {8.25 m}
–5' {–1.5 m}	lb {kg}	*15,080 {6,840}	*15,080 {6,840}	*25,220 {11,430}	*25,220 {11,430}	*25,570 {11,590}	15,280 {6,930}	16,480 {7,470}	10,210 {4,630}	11,980 {5,430}	7,610 {3,450}	11,730 {5,320}	7,470 {3,380}	25'4" {7.74 m}
–10' {–3.0 m}	lb {kg}	*26,430 {11,980}	*26,430 {11,980}	*32,130 {14,570}	29,850 {13,530}	*23,080 {10,460}	15,450 {7,000}	16,600 {7,520}	10,320 {4,680}			14,070 {6,380}	8,900 {4,030}	22'6" {6.85 m}
–15' {–4.6 m}	lb {kg}			*23,520 {10,660}	*23,520 {10,660}	*17,080 {7,740}	16,020 {7,260}					*13,320 {6,040}	12,690 {5,750}	17'9" {5.41 m}

SK210LC Long Arm	Boom: 18'6" {5.65 m} Arm: 11'6" {3.5 m} Without bucket: counterweight: 9,480 lb {4,300 kg} Shoe: 31.1" {790 mm} (Heavy Lift)												
A / B	5' {1.5 m}		10' {3.0 m}		15' {4.6 m}		20' {6.1 m}		25' {7.6 m}		At max. reach		
													Radius
25' {7.6 m}	lb {kg}											*8,150 {3,690}	*8,150 {3,690}	22'1" {6.74 m}
20' {6.1 m}	lb {kg}									*9,110 {4,130}	8,490 {3,850}	*7,640 {3,460}	*7,640 {3,460}	25'7" {7.81 m}
15' {4.6 m}	lb {kg}							*12,840 {5,820}	11,990 {5,430}	*12,030 {5,450}	8,360 {3,790}	*7,540 {3,420}	6,960 {3,150}	27'9" {8.47 m}
10' {3.0 m}	lb {kg}			*27,660 {12,540}	*27,660 {12,540}	*18,450 {8,360}	17,600 {7,980}	*14,790 {6,700}	11,380 {5,160}	12,510 {5,670}	8,070 {3,660}	*7,740 {3,510}	6,360 {2,880}	28'11" {8.82 m}
5' {1.5 m}	lb {kg}			*17,190 {7,790}	*17,190 {7,790}	*22,620 {10,260}	16,230 {7,360}	*16,860 {7,640}	10,730 {4,860}	12,160 {5,510}	7,750 {3,510}	*8,230 {3,730}	6,120 {2,770}	29'2" {8.89 m}
G.L.	lb {kg}			*17,710 {8,030}	*17,710 {8,030}	*25,160 {11,410}	15,360 {6,960}	16,550 {7,500}	10,240 {4,640}	11,870 {5,380}	7,490 {3,390}	*9,140 {4,140}	6,200 {2,810}	28'6" {8.69 m}
–5' {–1.5 m}	lb {kg}	*14,740 {6,680}	*14,740 {6,680}	*24,910 {11,290}	*24,910 {11,290}	*25,620 {11,620}	15,010 {6,800}	16,260 {7,370}	9,990 {4,530}	11,730 {5,320}	7,360 {3,330}	10,570 {4,790}	6,670 {3,020}	26'11" {8.22 m}
–10' {–3.0 m}	lb {kg}	*23,570 {10,690}	*23,570 {10,690}	*34,570 {15,680}	29,150 {13,220}	*24,010 {10,890}	15,060 {6,830}	16,270 {7,370}	9,990 {4,530}			12,350 {5,600}	7,760 {3,510}	24'3" {7.39 m}
–15' {–4.6 m}	lb {kg}	*35,250 {15,980}	*35,250 {15,980}	*27,490 {12,460}	*27,490 {12,460}	*19,640 {8,900}	15,470 {7,010}					*13,600 {6,160}	10,400 {4,710}	19'11" {6.08 m}

HIGH AND WIDE

SK210LC Standard arm	Boom: 18'6" {5.65 m} Arm: 9'8" {2.94 m} Without bucket: counterweight: 9,480 lb {4,300 kg} Shoe: 27.6" {700 mm} (Heavy Lift)												
A / B	5' {1.5 m}		10' {3.0 m}		15' {4.6 m}		20' {6.1 m}		25' {7.6 m}		At max. reach		
													Radius
25' {7.6 m}	lb {kg}							*12,340 {5,590}	*12,340 {5,590}			*9,300 {4,210}	*9,300 {4,210}	21'3" {6.47 m}
20' {6.1 m}	lb {kg}							*13,210 {5,990}	*13,210 {5,990}			*8,700 {3,940}	*8,700 {3,940}	24'7" {7.50 m}
15' {4.6 m}	lb {kg}					*17,190 {7,790}	*17,190 {7,790}	*14,540 {6,590}	*14,540 {6,590}	*13,250 {6,010}	10,380 {4,700}	*8,580 {3,890}	*8,580 {3,890}	26'7" {8.12 m}
10' {3.0 m}	lb {kg}					*21,390 {9,700}	*21,390 {9,700}	*16,440 {7,450}	14,020 {6,350}	*14,020 {6,350}	10,120 {4,590}	*8,820 {4,000}	8,700 {3,940}	27'7" {8.42 m}
5' {1.5 m}	lb {kg}					*24,750 {11,220}	20,310 {9,210}	*18,180 {8,240}	13,470 {6,100}	13,850 {6,280}	9,850 {4,460}	*9,430 {4,270}	8,540 {3,870}	27'8" {8.43 m}
G.L.	lb {kg}			*16,840 {7,630}	*16,840 {7,630}	*26,010 {11,790}	19,760 {8,960}	18,880 {8,560}	13,120 {5,950}	13,670 {6,200}	9,680 {4,390}	10,560 {4,780}	8,840 {4,000}	26'9" {8.16 m}
–5' {–1.5 m}	lb {kg}	*17,630 {7,990}	*17,630 {7,990}	*28,270 {12,820}	*28,270 {12,820}	*25,190 {11,420}	19,670 {8,920}	*18,700 {8,480}	13,010 {5,900}			*12,660 {5,740}	9,780 {4,430}	24'10" {7.57 m}
–10' {–3.0 m}	lb {kg}	*29,510 {13,380}	*29,510 {13,380}	*30,540 {13,850}	*30,540 {13,850}	*22,100 {10,020}	19,920 {9,030}	*16,090 {7,290}	13,220 {5,990}			*14,100 {6,390}	11,980 {5,430}	21'7" {6.58 m}
–15' {–4.6 m}	lb {kg}			*20,520 {9,300}	*20,520 {9,300}	*14,520 {6,580}	*14,520 {6,580}					*12,710 {5,760}	*12,710 {5,760}	16'2" {4.94 m}

SK210LC Long arm	Boom: 18'6" {5.65 m} Arm: 11'6" {3.5 m} Without bucket: counterweight: 9,480 lb {4,300 kg} Shoe: 27.6" {700 mm} (Heavy Lift)												
A / B	5' {1.5 m}		10' {3.0 m}		15' {4.6 m}		20' {6.1 m}		25' {7.6 m}		At max. reach		
													Radius
25' {7.6 m}	lb {kg}											*7,980 {3,610}	*7,980 {3,610}	23'1" {7.04 m}
20' {6.1 m}	lb {kg}									*10,180 {4,610}	*10,180 {4,610}	*7,590 {3,440}	*7,590 {3,440}	26'2" {7.99 m}
15' {4.6 m}	lb {kg}							*13,250 {6,010}	*13,250 {6,010}	*12,210 {5,530}	10,380 {4,700}	*7,560 {3,420}	*7,560 {3,420}	28'1" {8.58 m}
10' {3.0 m}	lb {kg}			*30,450 {13,810}	*30,450 {13,810}	*19,510 {8,840}	*19,510 {8,840}	*15,300 {6,930}	14,060 {6,370}	*13,160 {5,960}	10,070 {4,560}	*7,830 {3,550}	*7,830 {3,550}	29'0" {8.86 m}
5' {1.5 m}	lb {kg}			*16,100 {7,300}	*16,100 {7,300}	*23,410 {10,610}	20,390 {9,240}	*17,290 {7,840}	13,420 {6,080}	13,760 {6,240}	9,750 {4,420}	*8,400 {3,810}	7,800 {3,530}	29'1" {8.87 m}
G.L.	lb {kg}			*19,040 {8,630}	*19,040 {8,630}	*25,450 {11,540}	19,620 {8,890}	*18,590 {8,430}	12,970 {5,880}	13,500 {6,120}	9,510 {4,310}	*9,430 {4,270}	8,030 {3,640}	28'3" {8.61 m}
–5' {–1.5 m}	lb {kg}	*16,690 {7,570}	*16,690 {7,570}	*27,180 {12,320}	*27,180 {12,320}	*25,430 {11,530}	19,370 {8,780}	18,520 {8,400}	12,770 {5,790}	13,410 {6,080}	9,420 {4,270}	*11,260 {5,100}	8,760 {3,970}	25'6" {8.05 m}
–10' {–3.0 m}	lb {kg}	*25,960 {11,770}	*25,960 {11,770}	*33,260 {15,080}	*33,260 {15,080}	*23,290 {10,560}	19,500 {8,840}	*17,170 {7,780}	12,850 {5,820}			*13,670 {6,200}	10,430 {4,730}	23'5" {7.13 m}
–15' {–4.6 m}	lb {kg}			*25,100 {11,380}	*25,100 {11,380}	*17,930 {8,130}	*17,930 {8,130}					*13,420 {6,080}	*13,420 {6,080}	18'7" {5.66 m}

LONG REACH

SK210LC [Imperial]	Boom: 28′8″ Arm: 20′10″ Without bucket: counterweight: 12,110 lb Shoe: 31.1″																				
A / B	5′		10′		15′		20′		25′		30′		35′		40′		45′		At max. reach		Radius
40′	lb																		*2,480	*2,480	33′7″
35′	lb												*3,910	*3,910					*2,280	*2,280	38′0″
30′	lb												*4,810	*4,810	*3,170	*3,170			*2,170	*2,170	41′5″
25′	lb												*5,400	*5,400	*4,350	*4,350			*2,120	*2,120	43′11″
20′	lb												*5,700	*5,700	*5,140	4,710	*2,810	*2,810	*2,110	*2,110	45′9″
15′	lb											*6,660	*6,660	*6,080	5,770	*5,670	4,550	*3,790	3,610	*2,140	*2,140	47′0″
10′	lb			*13,260	*13,260	*14,150	*14,150	*10,500	*10,500	*8,550	*8,550	*7,350	6,990	*6,530	5,470	*5,950	4,360	*4,460	3,500	*2,200	*2,200	47′8″
5′	lb					*17,340	16,710	*12,260	11,440	*9,630	8,450	*8,040	6,520	*6,990	5,170	*6,250	4,160	*4,900	3,380	*2,310	*2,310	47′10″
G.L.	lb			*4,730	*4,730	*11,530	*11,530	*13,600	10,460	*10,520	7,830	*8,640	6,110	*7,390	4,890	6,390	3,980	*5,040	3,270	*2,460	*2,460	47′5″
–5′	lb	*4,600	*4,600	*6,390	*6,390	*11,340	*11,340	*14,350	9,850	*11,120	7,370	*9,080	5,790	7,540	4,670	6,240	3,830	*4,600	3,190	*2,670	*2,670	46′6″
–10′	lb	*6,630	*6,630	*8,410	*8,410	*12,780	*12,780	*14,560	9,540	*11,390	7,100	9,110	5,570	7,380	4,520	6,140	3,740	*3,070	*3,070	*2,980	*2,980	45′0″
–15′	lb	*8,730	*8,730	*10,720	*10,720	*15,100	14,280	*14,270	9,450	*11,280	6,990	9,010	5,470	7,310	4,450	6,110	3,720			*3,420	3,400	42′11″
–20′	lb	*11,020	*11,020	*13,380	*13,380	*17,510	14,520	*13,470	9,540	*10,770	7,010	*8,820	5,490	*7,290	4,480	*4,170	3,800			*4,090	3,800	40′0″
–25′	lb	*13,600	*13,600	*16,570	*16,570	*15,420	14,940	*12,080	9,780	*9,730	7,180	*7,900	5,630	*6,260	4,650					*5,230	4,470	36′2″
–30′	lb			*16,130	*16,130	*12,360	*12,360	*9,860	*9,860	*7,890	7,510	*6,050	5,960							*5,560	*5,560	31′2″
–35′	lb							*6,170	*6,170											*4,670	*4,670	24′0″

SK210LC [Metric]	Boom: 8.75 m Arm: 6.35 m Without bucket: counterweight: 5,490 kg Shoe: 790 mm																				
A / B	1.5 m		3.0 m		4.6 m		6.1 m		7.6 m		9.1 m		10.7 m		12.2 m		13.7 m		At max. reach		Radius
12.2 m	kg																		*1,120	*1,120	10.25 m
10.7 m	kg												*1,770	*1,770					*1,030	*1,030	11.60 m
9.1 m	kg												*2,180	*2,180	*1,430	*1,430			*980	*980	12.62 m
7.6 m	kg												*2,440	*2,440	*1,970	*1,970			*960	*960	13.39 m
6.1 m	kg												*2,580	*2,580	*2,330	2,130	*1,270	*1,270	*950	*950	13.95 m
4.6 m	kg											*3,020	*3,020	*2,750	2,610	*2,570	2,060	*1,710	1,630	*970	*970	14.33 m
3.0 m	kg			*6,010	*6,010	*6,410	*6,410	*4,760	*4,760	*3,870	*3,870	*3,330	3,170	*2,960	2,480	*2,690	1,970	*2,020	1,580	*990	*990	14.54 m
1.5 m	kg					*7,860	7,570	*5,560	5,180	*4,360	3,830	*3,640	2,950	*3,170	2,340	*2,830	1,880	*2,220	1,530	*1,040	*1,040	14.59 m
G.L.	kg			*2,140	*2,140	*5,220	*5,220	*6,160	4,740	*4,770	3,550	*3,910	2,770	*3,350	2,210	2,890	1,800	*2,280	1,480	*1,110	*1,110	14.47 m
–1.5 m	kg	*2,080	*2,080	*2,890	*2,890	*5,140	*5,140	*6,500	4,460	*5,040	3,340	*4,110	2,620	3,420	2,110	2,830	1,730	*2,080	1,440	*1,210	*1,210	14.19 m
–3.0 m	kg	*3,000	*3,000	*3,810	*3,810	*5,790	*5,790	*6,600	4,320	*5,160	3,220	4,130	2,520	3,340	2,050	2,780	1,690	*1,390	*1,390	*1,350	*1,350	13.73 m
–4.6 m	kg	*3,950	*3,950	*4,860	*4,860	*6,840	6,470	*6,470	4,280	*5,110	3,170	4,080	2,480	3,310	2,010	2,770	1,680			*1,550	1,540	13.08 m
–6.1 m	kg	*4,990	*4,990	*6,060	*6,060	*7,940	6,580	*6,100	4,320	*4,880	3,170	*4,000	2,490	*3,300	2,030	*1,890	1,720			*1,850	1,720	12.20 m
–7.6 m	kg	*6,160	*6,160	*7,510	*7,510	*6,990	6,770	*5,470	4,430	*4,410	3,250	*3,580	2,550	*2,830	2,100					*2,370	2,020	11.04 m
–9.1 m	kg			*7,310	*7,310	*5,600	*5,600	*4,470	*4,470	*3,570	3,400	*2,740	2,700							*2,520	*2,520	9.50 m
–10.7 m	kg							*2,790	*2,790											*2,110	*2,110	7.33 m

Note:
1. Do not attempt to lift or hold any load that is greater than these lift capacities at their specified lift point radius and heights. Weight of all accessories must be deducted from the above lift capacities.
2. Lift capacities are based on machine standing on level, firm, and uniform ground. User must make allowance for job conditions such as soft or uneven ground, out of level conditions, side loads, sudden stopping of loads, hazardous conditions, experience of personnel, etc.
3. Bucket pin attachment point defined as lift point.
4. The above lift capacities are in compliance with ISO 10567. They do not exceed 87% of hydraulic lift capacity or 75% of tipping load. Lift capacities marked with an asterisk(*) are limited by hydraulic capacity rather than tipping load.
5. Operator should be fully acquainted with the Operator's and Maintenance Instructions before operating this machine. Rules for safe operation of equipment should be adhered to at all times.
6. Lift capacities apply to only machine as originally manufactured and normally equipped by KOBELCO CONSTRUCTION MACHINERY CO., LTD.

Standard and Optional Equipment

●=Std ○=Opt

Category	Description	SK210LC-11		
		LC	H&W	Long Reach
Engine	YANMAR 4TN107FTT (Tier IV Final certified)	●	●	●
	Auto engine acceleration/deceleration	●	●	●
	Auto Idle Stop	●	●	●
Hydraulic system	3 work modes H, S, Eco	●	●	–
	Power boost	●	●	–
	Heavy lift mode	●	●	–
	Hydraulic Pressure Release	●	●	●
	Independent travel	●	●	●
	Single pedal travel	○	○	○
	Swing priority	●	●	●
	Boom to arm regeneration	●	●	●
	Auto warm-up system	●	●	●
	Bi-direction (proportional hand control) and single-direction auxiliary hydraulics (nibbler and breaker)	●	●	–
	Rotation hydraulics with proportional hand control	○	○	–
	Hydraulic oil VG46	●	●	●
Cabin	Air suspension seat with heat	●	●	●
	10-inch color monitor	●	●	●
	LED door light	●	●	●
	Automatic climate control	●	●	●
	Radio (AM/FM, AUX, USB, Bluetooth® and hands-free telephone)	●	●	●
	12V power outlet	●	●	●
Lights	7 LED work lights: 2 on boom, 2 on cab front, 2 on rear counterweight, 1 on front right	●	●	●
Working equipment	Standard HD boom 18'6" {5.65 m}	●	●	–
	Standard HD arm 9'8" {2.94 m} with rock guard	●	●	–
	Long HD arm 11'6" {3.5 m} with rock guard	○	○	–
	Long reach attachment 50' {15.24 m}	–	–	●
Counter weight	Standard C/W 9,480 lb {4,300 kg} with swing flashers	●	●	–
	Long reach C/W 12,100 lb {5,490 kg} with swing flashers (for long reach only)	–	–	●
Undercarriage	27.6" {700 mm} triple grouser shoe	○	–	○
	31.1" {790 mm} triple grouser shoe	●	–	●
	35.4" {900 mm} triple grouser shoe	○	○	○
	27.6" {700 mm} double grouser shoe	–	●	–
	31.5" {800 mm} triple grouser shoe	–	○	–
	High and Wide lower frame	–	●	–
	Full track guide	–	●	–
	Track guides (three per side)	●	–	●
	Lower swivel guard	●	●	●
Safety	ROPS cab (ISO 12117-2:2008)	●	●	●
	Tilt opening top cab guard (Top guard level II ISO 10262:1998)	●	●	●
	Bar-type front guard (Front guard level II ISO 10262:1998)	○	○	○
	Mesh-type front guard (Front guard level I ISO 10262:1998)	○	○	○
	Engine emergency stop switch	●	●	●
	3-inch retractable seat belt	●	●	●
	Seatbelt indicator on display	●	●	●
	Travel alarm	●	●	●
	Swing flashers in counterweight	●	●	●
	Left and right side mirrors	●	●	●
	3-side 270-degree camera system	●	●	●
	Hose burst valve for boom and arm cylinder	○	○	○
Others	Angled upper deck guards	●	●	●
	Machine Guidance ready brackets	●	●	–
	Quick coupler piping	●	●	–
	ISO to BHL pattern changer	●	●	●
	Battery disconnect switch	●	●	●
	KOMEXS Machine Monitoring	●	●	●
	4 Year or 4,000 Hour Warranty	●	●	●

Note: Bluetooth® is a registered trademark of the Bluetooth SIG Inc.
Note: This catalog may contain attachments and optional equipment that are not available in your area. And it may contain photographs of machines with specifications that differ from those of machines sold in your areas. Please consult your nearest KOBELCO distributor for those items you require. Due to our policy of continuous product improvements all designs and specifications are subject to change without advance notice.
Copyright by **KOBELCO CONSTRUCTION MACHINERY CO., LTD.** No part of this catalog may be reproduced in any manner without notice.

KOBELCO CONSTRUCTION MACHINERY U.S.A. INC.

www.KOBELCO-USA.com

KOBELCO is the corporate mark used by Kobe Steel on a variety of products and in the names of a number of Kobe Steel Group companies.

Inquiries To:

Bulletin No. SK210LC-11_NA_4E_2510