KOBELCO

SK650DLC-11

Performance X Design

Building Demolition Machine

-11 SERIES

SK650DLC

Engine Power:

463 hp {345 kW} @ 1,800 rpm
(SAE NET)

Operating Weight:

166,400 lb {75,500 kg}–178,100 lb {80,800 kg}



Complies with the latest exhaust emission regulations

US EPA Tier IV Final

Performance X Design

PERFORMANCE — Improved power and speed, thru the pursuit of efficiency and productivity.

DESIGN — An operator-first design with no compromises on ease of use and comfort.

By combining these two principles, KOBELCO has achieved their goal of creating a unique and specialized machine for the demolition market.

A machine that can work hard every day and take on the challenges it was built for.

SK650D LC



*Attachment Tool Not Included

To the Next Level of Power and Functional Aesthetics

Higher Efficiency, Plus a Tier IV Final Compliant Engine

Our Tier IV Final compliant engine is fitted with a diesel oxidation catalyst (DOC) and an SCR device to control emissions without using a diesel particulate filter (DPF). It has a large-capacity DEF tank, extending intervals between fill-ups.



Model : ISUZU 6WG1

Engine output

463 hp {345 kW}/1,800 rpm
(SAE NET)



A jog dial for simple operation

Multiple operations can be performed with the jog dial by simply turning, selecting, pushing, and confirming while navigating through the dial display.



Large easy-to-see 10-inch color monitor

Important information is easy to read, and operations can be performed from a simple menu screen.
The camera can also be easily checked from the large screen, contributing to safe operation.



New tilting console for ease of entry and exit

The left console has a safety lever to raise the console at a steep angle for ease of access and exit.



Automatic LED door light

The cab is equipped with a bright LED light that automatically lights up when the door is opened or when the key is turned off.



Advanced LED backlight

Switches and dials utilize LED backlighting to increase visibility at night and improves the ambiance of the interior.

Specification selection

Select attachments to perform demolition from high heights to lower stories, and even basement levels with just one machine.

Ultra long attachment specification

Excels at demolishing aging five to eight story buildings

Uses a 3-piece ultra long attachment with cross-cylinder construction. By combining one type of arm and an optional boom insert, you can choose from a total of two attachment configurations to reach the heights you need. Ideal for demolition sites that require a height of 82'11" {25.3 m} to 92'7" {28.2 m} or less.

Maximum working height (arm top pin)

26'11" {8.2 m} arm, with boom insert :

Approximately **92'7" {28.2 m}**

26'11" {8.2 m} arm, no boom insert :

Approximately **82'11" {25.3 m}**

Max.tool weight

Ultra long attachment (92'7" {28.2 m}) :

8,160 lb {3,700 kg}

Ultra long attachment (82'11" {25.3 m}) :

8,160 lb {3,700 kg}

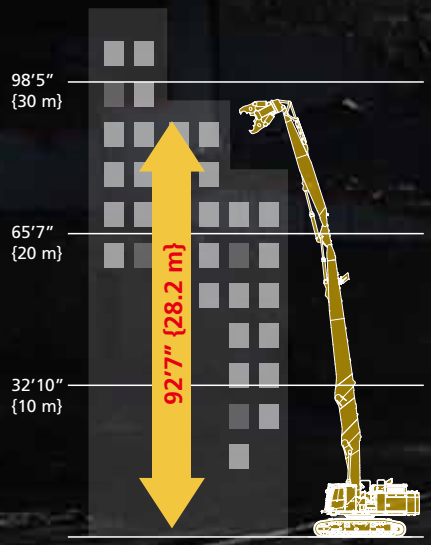

26'11" {8.2 m} arm (with boom insert)

*Attachment Tool Not Included

Separate boom specification and Separate boom with insert specification



*Attachment Tool Not Included

Demolition specifications for diverse tasks

The Separate Boom specification offers a wide working range, enabling demolition of low-rise and ground-level foundations. The powerful attachment support provided by the large-diameter jib cylinder allows for efficient work at tall heights. Furthermore, by attaching the insert boom, it became possible to demolish buildings up to 59'9"{18.2m} tall.

Max.tool weight

Separate boom :

13,400 lb {6,100 kg}

Separate boom (with Insert boom) :

13,400 lb {6,100 kg}

Separate boom specification working range (arm top pin)

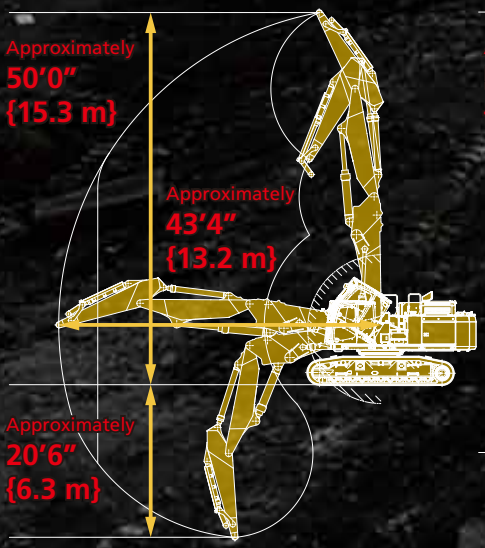

Separate boom with insert boom specification working range (arm top pin)

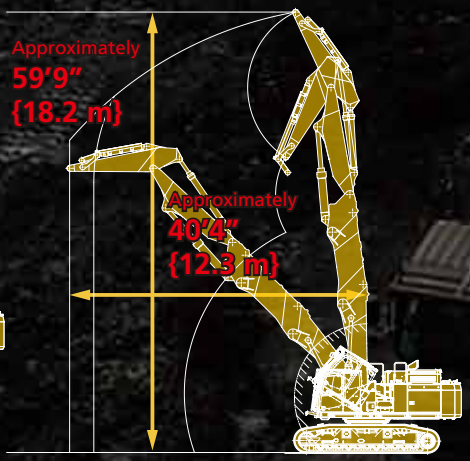

Transport of disassembled machine

Including NEXT attachments, incorporates KOBELCO's state-of-the-art assembly/disassembly technology.

Quick assembly NEXT attachments

KOBELCO's original joint system was developed by testing the assembly/disassembly process extensively. The boom attachment can be connected just by hooking the upper pin and securing it with the hydraulic pin on the lower side.

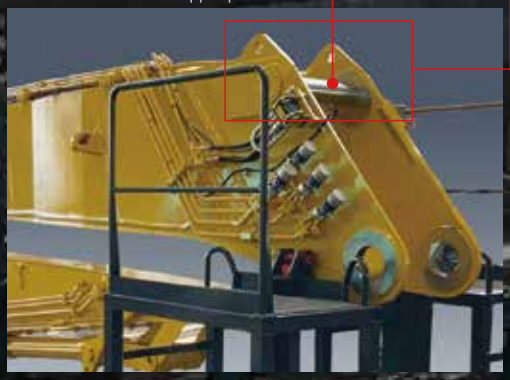

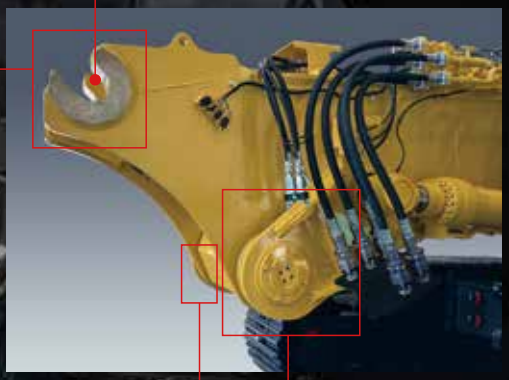



Assembly and disassembly mode is included.

Piping connection also simple with multi-coupler and quick-coupler

With the attachment joint part, connect the hydraulic piping to the boom side, and then connect/disconnect with the multi-coupler or quick coupler. Piping connections can be made easily without the use of tools.



Multi-coupler



Quick-coupler

Quick coupler piping is equipped as standard

Dedicated piping is equipped as standard to attach the quick coupler for easy exchange of front attachments.



Attachment pressure drain from the display

Hydraulic oil pressure draining before exchanging the front attachment or disassembling the boom attachment can be done by selecting it on the display from the operator's seat.



Crawler width changeable while grounded

A crawler extension/retraction mechanism is provided for retracting the lower width for trailer loading. Extension / retraction can be performed easily with the hydraulic mechanism while the machine is grounded with the shoes. No need to fasten any bolts.

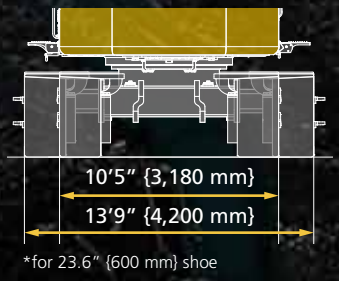

*for 23.6" {600 mm} shoe

Crawler width when retracted :

10'5" {3,180 mm}



Counterweight Removal System (Optional)

With less weight during transport, counterweight removal and installation is a safe, one-person job, saving labor and crane rental costs.





Attachment height during transport

[NEXT Ultra long attachment specification]

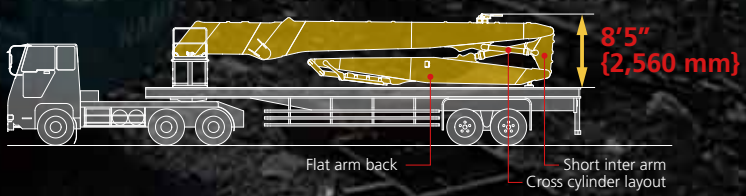

Note : Loading of lashing point

Lashing points (brackets colored red) are set on the lower main body.



Reliability and safety

KOBELCO's latest technology for keeping the machine in top shape and protecting the operator.

Hydraulic drive for engine cooling fan; independent oil cooler fan

Hydraulic drive optimizes the cooling fan rotation speed to improve fuel economy and reduce noise. Also, the independent oil cooler fan better matches cooling to the hydraulic oil temperature, for optimal oil temperature control.



A reverse fan to facilitate maintaining cooling performance

To prevent clogging that reduces cooling performance in parts like the radiator, oil cooler, or intercooler, a reverse fan has been added to blow away dust. Cooling devices can be cleaned with the flip of a switch, maintaining heat balance. This also renders burdensome and time consuming daily cleaning unnecessary.



Cab interference prevention system with soft-stop feature

The cab interference prevention system is standard. This feature sounds an alarm and prevents the machine from allowing the working tool to come into contact with the cab during operation. Current tool position can be detected with high accuracy so tool can be safely moved at close range without contacting the cab, resulting in safe working range. Operator is able to program multiple tools into the systems.



Boom angle sensor



Jib angle sensor



Arm angle sensor



Bucket angle sensor



Cab interference warning display

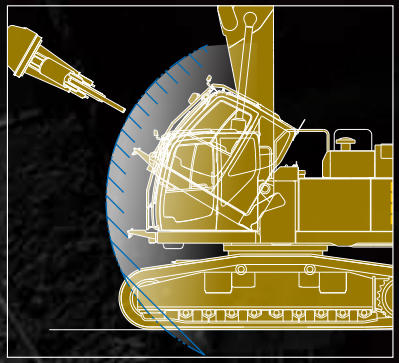

Stability warning system with longitudinal/ horizontal detection

Visually displays attachment posture status and working height/radius to support safer demolition operations. Furthermore, if machine stability is compromised, the operator receives continuous audible alerts. The working range is largest when working in-line with the track frame or over front of machine. For maximum stability and safety, Kobelco recommends working in-line with the track frame whenever possible.

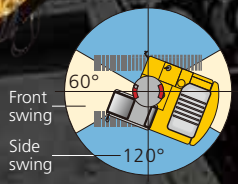



Work posture display

LED work light to keep visibility in low light or at night

Equipped with eight bright LED work lights. The lights keep the work area bright in low light or at night for both the operator and other workers in the area.



Upper structure (1 light)



Cab top (2 lights)



Cab bottom (1 light)



Attachment (2 lights)



Counterweight (2 lights)

*Attachment Tool Not Included

Rear, right, left side images / three side view

The body has cameras on the rear, right, and left sides. The large color monitor can be used to check the visibility around the machine for additional safety. Multiple viewing options allow the operator to customize what is being displayed.



Three sided view

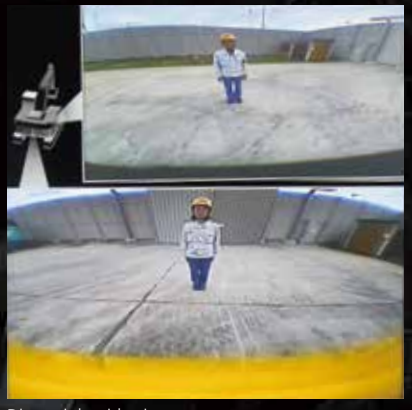

Direct right-side view

Comfort

A unique operating environment of building demolition machine to prevent operator fatigue.

Demolition spec cab with tilting function

A Demolition spec cab with a 30 degree tilt capability is equipped as standard for comfortably demolishing tall buildings where the operator spends a long time looking up. Skylight and angled grids on the cab guard for improved visibility and angled grids on the cab guard, good work visibility is maintained.



Easy to clean open/close
(upper front window and skylight)



Vertical open/close roller shades to block direct sunlight.



High upper visibility



Cab tilt operation switch



Emergency manual valve for lowering cab

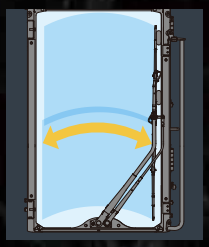

The single-pane front window and large front wiper ensure thorough wiping all the way to the footwell.

Air suspension seat

GRAMMER* air suspension seat with heat is standard. It has superior shock absorption and can be used for long periods of time and reducing fatigue.



In addition to the standard headrest, a large neck rest compatible with hard hats is also included.

Equipment

Multiple standard features and accessories built for demolition and ensuring safety.

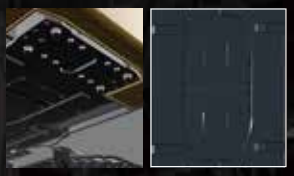

Upper frame and Lower frame guard
The main body interior and travel system hydraulic circuits are protected by 0.24" {6 mm} and 0.35" {9 mm} thick steel plate covers.



Catwalk
Catwalks are installed on both the left and right sides at the base of the machine, providing easier access for maintenance.



Safety valve for boom & arm & jib cylinder
Prevents attachment from falling if piping is ruptured.



Bucket cylinder guard
Prevents damage to the cylinder from falling debris.



Full Track guide
Prevents treads from coming off when mounting on demolition rubble.



Public address system
Alert workers in the area with clear audio quality.



Cab lower mirror
Check safety at foot areas and under the cab when tilted.



Cab entry step
Positioned for convenient access to the tilt cab.



Auto lubrication system
Quickly lubricate the attachments.



Water spray
Drain circuit is provided for rust prevention.



Falling object deflector
The guard deflects falling debris away from the machine. This is standard for the ultra long attachment.



Attachment stand
By standing on the side step, you can more accurately check the positions of the upper pin and connection hook during attachment assembly.

* The accessory settings may differ according to the specification. Refer to the list of key accessories on the back page for details.

Specifications

Engine

Model	ISUZU 6WG1
Type	Direct injection, water-cooled, 4-cycle diesel engine with turbocharger, intercooler, Tier IV Final certified
No. of cylinders	6
Bore and stroke	5.8" × 6.1" {147 mm × 154 mm}
Displacement	956.9 cu.in {15.681 L}
Rated power output	463 hp {345 kW} /1,800 rpm (Without fan)
Max. torque	1,460 lb-ft {1,980 N·m} /1,500 rpm (Without fan)

Hydraulic system

Pump	
Type	Two variable displacement piston pumps + rotary pump + pilot pump +fan piston pump
Max. discharge flow	2 × 97.7 U.S. gpm {2 × 370 L/min} 1 × 15.4 U.S. gpm {1 × 58.5 L/min} 1 × 7.1 U.S. gpm {1 × 27 L/min} 1 × 16.6 U.S. gpm {1 × 63 L/min}
Relief valve setting	
Boom, arm and bucket	4,970 psi {34.3 MPa}
Power boost	5,480 psi {37.8 MPa}
Travel circuit	4,970 psi {34.3 MPa}
Swing circuit	3,770 psi {26.0 MPa}
Control circuit	725 psi {5.0 MPa}
Attachment circuit	Open & Close: 3,550 psi {24.5 MPa} (Up to 5,480 psi {37.8 MPa}) Rotation 2,990 psi {20.6 MPa}
Pilot control pump	Gear type
Main control valves	8 + 2-spool
Oil cooler	Air cooled type

Swing system

Swing motor	Two fixed displacement piston motors × 2
Brake	Hydraulic; locking automatically when the swing control lever is in the neutral position
Parking brake	Wet multiple plate
Swing speed	4.0 rpm (Ultra long attachment) 6.4 rpm (Separate boom)
Swing torque	139,000 lb-ft {188.4 kN·m}
Tail swing radius	13'1" {3,990 mm}

Hydraulic P.T.O.

Output / Specification	Maximum pressure psi {MPa}	Max. flow U.S. gpm, {lpm} (0 pressure)
		1,800 rpm
Crusher	4,970 {34.3}	2 x 97.7 {370}
Rotary	2,990 {20.6}	15.4 {58.5}

Travel system

Travel motors	Variable displacement piston motor with counterbalance valve
Travel brakes	Hydraulic brake
Parking brakes	Wet multiple plate
Travel shoes	55 each side
Travel speed (high / low)	3.3/1.7 mph {5.3/2.7 km/h}
Drawbar pulling force	107,000 lbf {474 kN} Separate boom
	106,000 lbf {472 kN} Separate boom (with Insert boom)
	106,000 lbf {473 kN} Ultra long attachment (92'7" {28.2 m})
	107,000 lbf {475 kN} Ultra long attachment (82'11" {25.3 m})
Gradeability	18% {10°}

Cab & control

Cab
All-weather, sound-suppressed steel cab mounted on the silicon-sealed viscous mounts and equipped with a heavy, insulated floor mat Demolition spec cab with tilting function (30°)
Control
Two hand levers and two foot pedals for travel
Two hand levers and one foot pedal for front attachment and swing
Electric rotary-type engine throttle

Cylinders

bore x stroke (ft-in {mm})

Attachment type	NEXT Ultra long attachment
Boom cylinders	7.5" {190} × 5'4" {1,630}
Jib cylinders	5.9" {150} × 4'0" {1,231}
Arm cylinder	7.1" {180} × 4'7" {1,404}
Bucket cylinder	5.9" {150} × 3'11" {1,193}
Attachment type	**Separate attachment**
Boom cylinders	7.5" {190} × 5'4" {1,630}
Jib cylinder	10.6" {270} × 4'8" {1,418}
Arm cylinder	7.5" {190} × 6'6" {1,990}
Bucket cylinder	6.3" {160} × 4'8" {1,410}

Refilling capacities & lubrications

Fuel tank	190.2 U.S.gal {720 L}
Cooling system	18.2 U.S.gal {69 L}
Engine oil	15.1 U.S.gal {57 L}
Travel reduction gear	2 × 4.8 U.S.gal {18 L}
Swing reduction gear	2 × 1.3 U.S.gal {5 L}
Hydraulic oil tank	97.7 U.S.gal {370 L}: Tank oil level
	212.1 U.S.gal {803 L}: Hydraulic system
DEF/Urea tank	21.9 U.S.gal {83 L}

Operating weight & ground pressure

Attachment Type		NEXT Ultra long attachment / equipment*		Separate attachment*	
		26'11" {8.2 m} arm (92'7" {28.2 m} height)	26'11" {8.2 m} arm (82'11" {25.3 m} height)	without Insert boom	with Insert boom
Operating Weight	Layered C/W	174,400 lb {79,100 kg}	168,200 lb {76,300 kg}	172,000 lb {78,000 kg}	178,100 lb {80,800 kg}
	Removable C/W	172,600 lb {78,300 kg}	166,400 lb {75,500 kg}	170,200 lb {77,200 kg}	176,400 lb {80,000 kg}
Ground Pressure	Layered C/W	17.4 psi {120 kPa}	16.8 psi {116 kPa}	17.3 psi {119 kPa}	17.8 psi {123 kPa}
	Removable C/W	17.3 psi {119 kPa}	16.7 psi {115 kPa}	17.0 psi {117 kPa}	17.7 psi {122 kPa}

* Measured with max tool weight

Dimensions (main body + base boom)

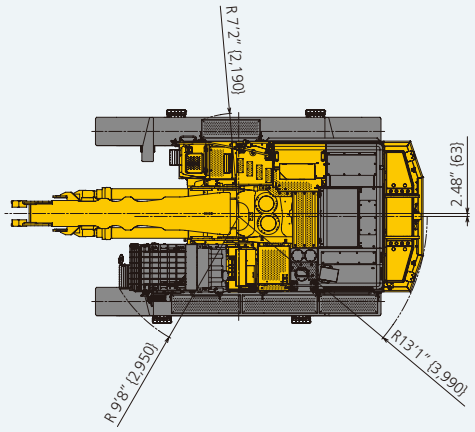

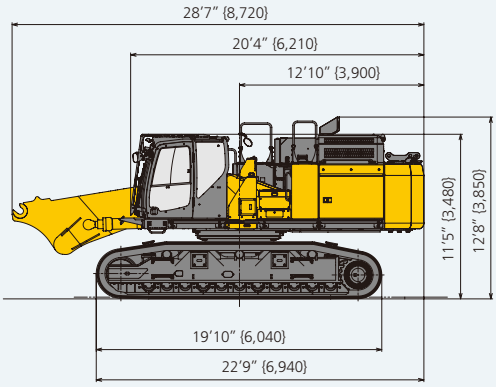

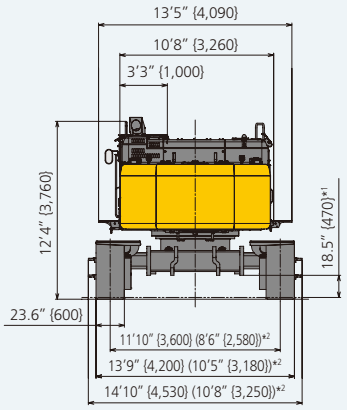

*1 Excluding height of grouser
*2 ( ) indicates the crawler width when stored.

Assembled machine dimensions

● NEXT Ultra long attachment specification : 26'11" {8.2 m} arm + 9'10" {3.0 m} boom insert

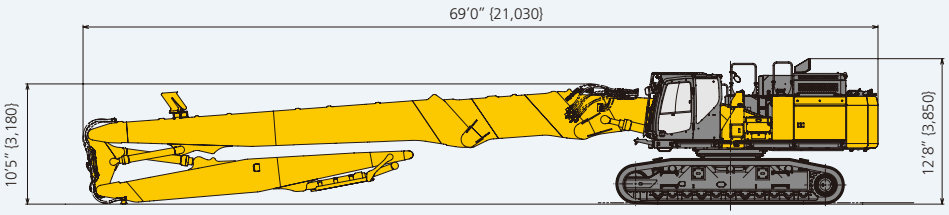

● NEXT Ultra long attachment specification : 26'11" {8.2 m} arm

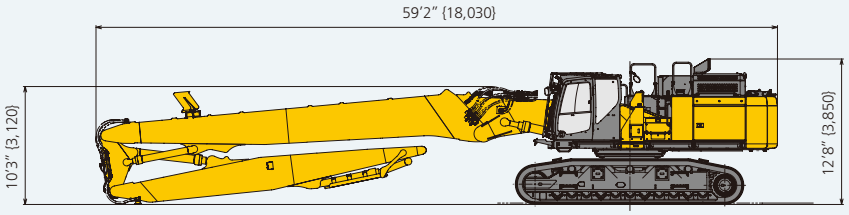

● NEXT Separate boom specification: 11'4" {3.45 m} arm + 9'10" {3.0 m} boom insert

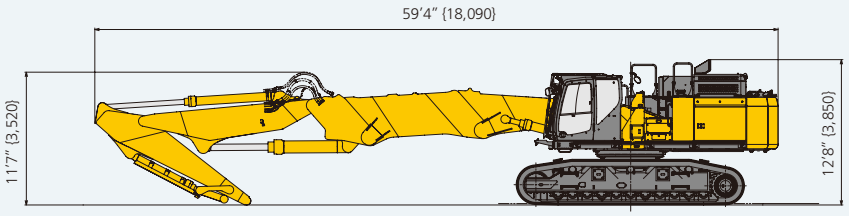

● NEXT Separate boom specification: 11'4" {3.45 m} arm

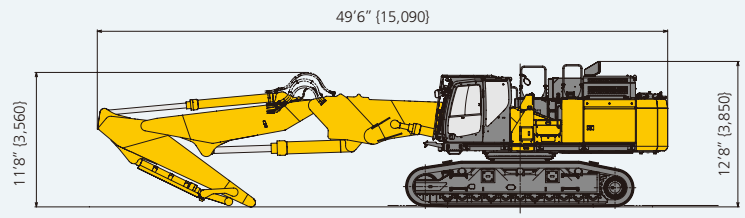

Specifications

Disassembled dimensions and weight

(Unit: ft-in {mm}, lb {kg})

Base machine + base boom

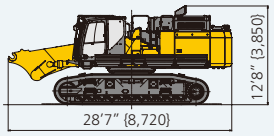

Weight: 138,000 lb {62,800 kg} (Layered counterweight)
137,000 lb {62,000 kg} (Removable counterweight)

Base machine + base boom (without counterweight)



Weight: 105,000 lb {47,500 kg} (Layered counterweight)
109,000 lb {49,600 kg} (Removable counterweight)

Layered counterweight (Case + Inner)

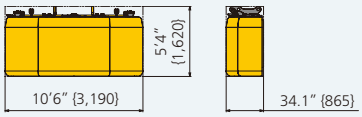

Weight: 33,500 lb {15,200 kg}

Layered counterweight (Inner)

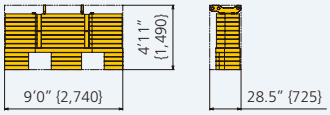

Weight: 25,600 lb {11,600 kg}

NEXT Ultra long attachment:
26'11" {8.2 m} arm + 9'10" {3.0 m} boom insert
(including enclosed stand)

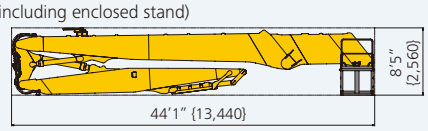

Overall width: 8'1" ft-in {2,470 mm} Weight: 28,400 lb {12,900 kg}

NEXT Ultra long attachment:
26'11" {8.2 m} arm (including enclosed stand)

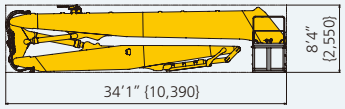

Overall width: 8'1" ft-in {2,470 mm} Weight: 22,300 lb {10,100 kg}

NEXT Ultra long attachment :
9'10" {3.0 m} boom insert (including optional stand)

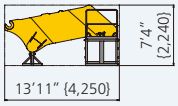

Overall width: 8'1" ft-in {2,470 mm} Weight: 7,120 lb {3,230 kg}

NEXT Separate boom (including enclosed stand)

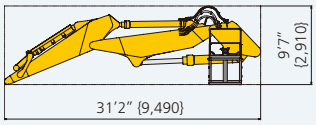

Overall width: 8'1" ft-in {2,470 mm} Weight: 20,600 lb {9,330 kg}

Removable counterweight

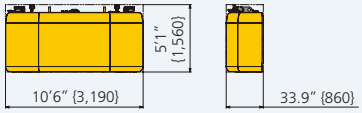

Weight: 27,100 lb {12,300 kg}

Lift capacities

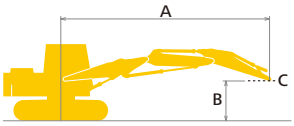

Rating over front

Rating over side or 90 degrees

A – Reach from swing centerline to arm top
B – Arm pin height above/below ground
C – Lift point {kg}
Relief valve setting: 5,480 psi {37.8 MPa}

SK650DLC Boom: Separate Arm: 11'4" {3.45 m} Without bucket: Counterweight: 27,100 lb {12,300 kg} Shoe: 23.6" {600 mm} (Heavy Lift)

A / B		10' {3.0 m}		15' {4.6 m}		20' {6.1 m}		25' {7.6 m}		30' {9.1 m}		35' {10.7 m}		40' {12.2 m}		At max. reach		
																		Radius
50' {15.2 m}	lb {kg}															*56,290 {25,530}	*56,290 {25,530}	8'4" {2.55 m}
45' {13.7 m}	lb {kg}			*40,210 {18,230}	*40,210 {18,230}	*31,470 {14,270}	*31,470 {14,270}									*33,240 {15,070}	*33,240 {15,070}	21'11" {6.69 m}
40' {12.2 m}	lb {kg}			*33,220 {15,060}	*33,220 {15,060}	*35,330 {16,020}	*35,330 {16,020}	*25,760 {11,680}	*25,760 {11,680}							*27,760 {12,590}	*27,760 {12,590}	28'10" {8.81 m}
35' {10.7 m}	lb {kg}			*29,180 {13,230}	*29,180 {13,230}	*32,580 {14,770}	*32,580 {14,770}	*23,290 {10,560}	*23,290 {10,560}	*23,610 {10,700}	*23,610 {10,700}					*25,100 {11,380}	*25,100 {11,380}	33'8" {10.27 m}
30' {9.1 m}	lb {kg}	*24,570 {11,140}	*24,570 {11,140}	*30,210 {13,700}	*30,210 {13,700}	*34,060 {15,440}	*34,060 {15,440}	*36,230 {16,430}	*36,230 {16,430}	*22,520 {10,210}	*22,520 {10,210}	*22,840 {10,360}	*22,840 {10,360}			*23,620 {10,710}	23,290 {10,560}	37'2" {11.34 m}
25' {7.6 m}	lb {kg}			*60,480 {27,430}	*60,480 {27,430}	*49,370 {22,390}	*49,370 {22,390}	*28,240 {12,800}	*28,240 {12,800}	*24,590 {11,150}	*24,590 {11,150}	*22,460 {10,180}	*22,460 {10,180}			*22,820 {10,350}	20,570 {9,330}	39'9" {12.12 m}
20' {6.1 m}	lb {kg}	*55,620 {25,220}	*55,620 {25,220}	*60,440 {27,410}	*60,440 {27,410}	*35,840 {16,250}	*35,840 {16,250}	*30,810 {13,970}	*30,810 {13,970}	*27,970 {12,680}	*27,970 {12,680}	*23,140 {10,490}	*23,140 {10,490}	*22,500 {10,200}	20,220 {9,170}	*22,470 {10,190}	18,860 {8,550}	41'7" {12.67 m}
15' {4.6 m}	lb {kg}			*33,340 {15,120}	*33,340 {15,120}	*42,240 {19,150}	*42,240 {19,150}	*34,240 {15,530}	*34,240 {15,530}	*29,850 {13,530}	*29,850 {13,530}	*24,690 {11,190}	24,220 {10,980}	*23,260 {10,550}	19,810 {8,990}	*22,500 {10,200}	17,820 {8,080}	42'8" {13.02 m}
10' {3.0 m}	lb {kg}					*31,970 {14,500}	*31,970 {14,500}	*37,830 {17,150}	36,760 {16,670}	*31,980 {14,500}	28,910 {13,110}	*27,150 {12,310}	23,420 {10,620}	*24,640 {11,170}	19,390 {8,790}	*21,630 {9,810}	17,300 {7,840}	43'3" {13.18 m}
5' {1.5 m}	lb {kg}					*27,360 {12,410}	*27,360 {12,410}	*39,910 {18,100}	35,680 {16,180}	*33,620 {15,240}	28,020 {12,700}	*28,340 {12,850}	22,830 {10,350}	*23,730 {10,760}	19,060 {8,640}	*20,110 {9,120}	17,230 {7,810}	43'2" {13.16 m}
G.L.	lb {kg}			*25,350 {11,490}	*25,350 {11,490}	*26,070 {11,820}	*26,070 {11,820}	*36,200 {16,420}	35,380 {16,040}	*31,320 {14,200}	27,590 {12,510}	*26,470 {12,000}	22,500 {10,200}	*21,700 {9,840}	18,930 {8,580}	*18,290 {8,290}	17,620 {7,990}	42'6" {12.96 m}
–5' {–1.5 m}	lb {kg}	*39,400 {17,870}	*39,400 {17,870}	*58,060 {26,330}	*58,060 {26,330}	*54,950 {24,920}	52,630 {23,870}	*31,290 {14,190}	*31,290 {14,190}	*27,770 {12,590}	27,570 {12,500}	*23,440 {10,630}	22,500 {10,200}	*18,210 {8,250}	*18,210 {8,250}	*15,970 {7,240}	*15,970 {7,240}	41'3" {12.57 m}
–10' {–3.0 m}	lb {kg}	*56,910 {25,810}	*56,910 {25,810}	*68,270 {30,960}	*68,270 {30,960}	*53,120 {24,090}	52,640 {23,870}	*42,470 {19,260}	38,060 {17,260}	*22,780 {10,330}	*22,780 {10,330}	*18,820 {8,530}	*18,820 {8,530}			*17,060 {7,730}	*17,060 {7,730}	38'5" {11.72 m}
–15' {–4.6 m}	lb {kg}			*61,970 {28,100}	*61,970 {28,100}	*48,950 {22,200}	*48,950 {22,200}	*39,160 {17,760}	38,550 {17,480}	*28,900 {13,100}	*28,900 {13,100}}					*20,390 {9,240}	*20,390 {9,240}	33'8" {10.26 m}
–20' {–6.1 m}	lb {kg}					*40,580 {18,400}	*40,580 {18,400}}									*32,840 {14,890}	*32,840 {14,890}	23'1" {7.04 m}

Notes:
1. Do not attempt to lift or hold any load that is greater than these lift capacities at their specified lift point radius and height. Weight of all accessories must be deducted from the above lift capacities.
2. Lift capacities are based on machine standing on level, firm, and uniform ground. User must make allowance for job conditions such as soft or uneven ground out of level conditions, side loads, sudden stopping of loads, hazardous conditions, experience of personnel, etc.
3. Arm top pin is defined as lift point.
4. The above lift capacities are in compliance with SAE J/ISO 10567. They do not exceed 87 % of hydraulic lift capacity or 75 % of tipping load. Lifting capacities marked with an asterisk (*) are limited by hydraulic capacity rather than tipping load.
5. Operator should be fully acquainted with the operator's and Maintenance Instructions before operating this machine and rules for safe operation of equipment should be adhered to at all times.
6. Lift capacities apply to only machine as originally manufactured and normally equipped by KOBELCO CONSTRUCTION MACHINERY CO., LTD.
7. This table cannot be applied for high reach demolition machines.

Working range

Working ranges with max tool weight installed.

* Although within Max. tool weight, the center of gravity of different tool types can vary.
Depending on the tool type and working position of the front attachment, the cylinder may not hold the excessive load making it difficult to perform the intended work.

(Unit: ft-in {mm})

NEXT Ultra long attachment specification: 26'11" {8.2 m} arm + 9'10" {3.0 m} boom insert

Max. tool weight = 8,160 lb {3,700 kg}

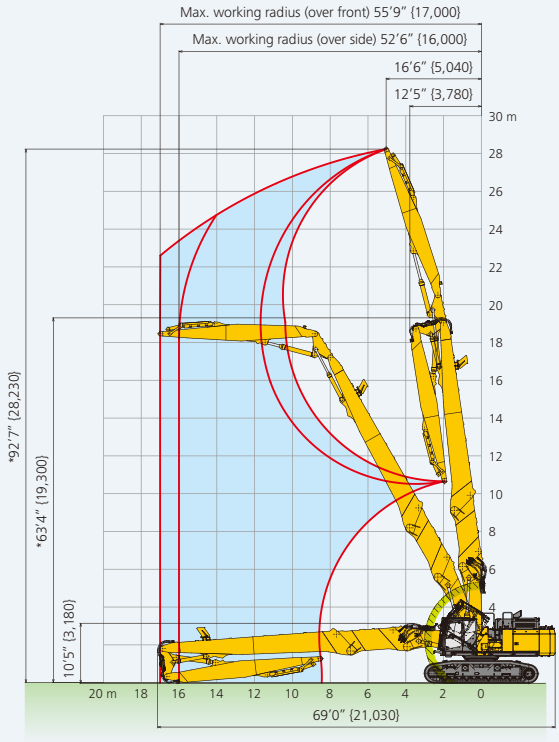

NEXT Ultra long attachment specification: 26'11" {8.2 m} arm

Max. tool weight = 8,160 lb {3,700 kg}

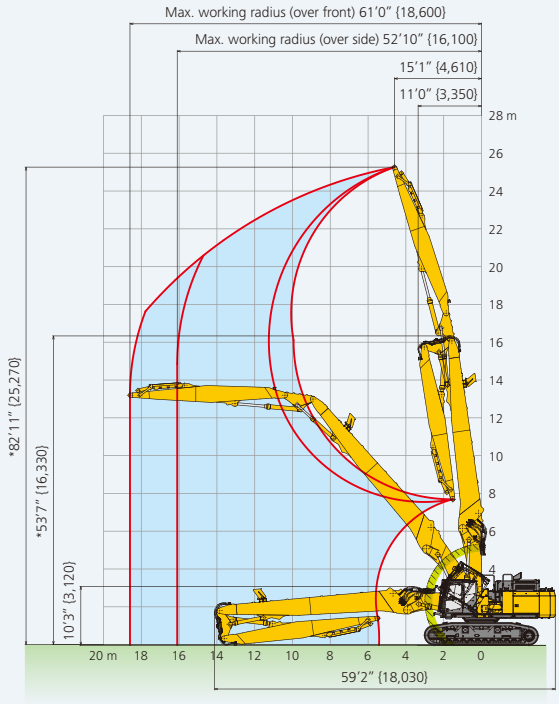

NEXT Separate boom specification: 11'4" {3.45 m} arm + 9'10" {3.0 m} boom insert

Max. tool weight = 13,400 lb {6,100 kg}

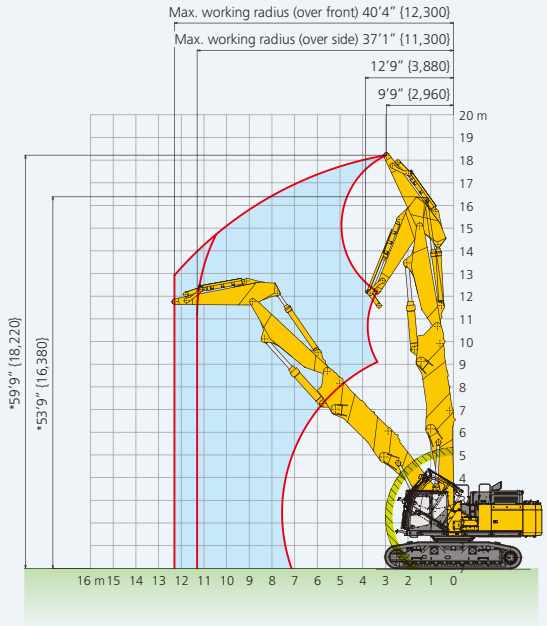

NEXT Separate boom specification: 11'4" {3.45 m} arm

Max. tool weight = 13,400 lb {6,100 kg}

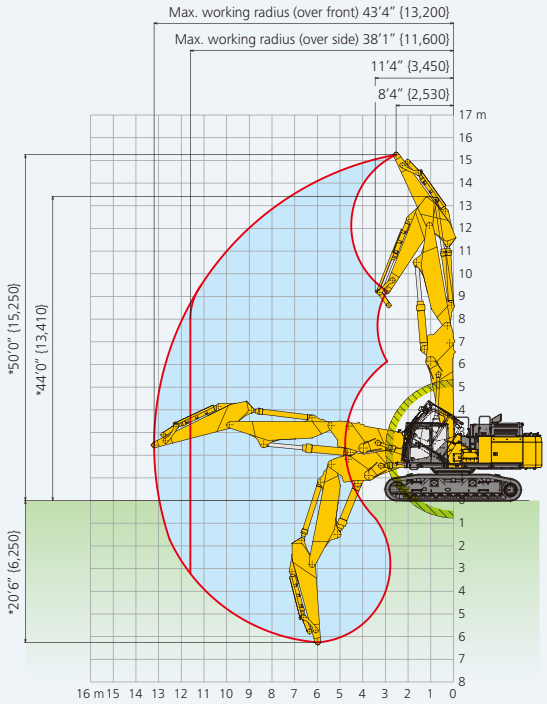

*Without including height of shoe lug. *Cab interference prevention system operating area. *Max tool weight, operation height, and working range provided in this brochure are based on the arm top pin.

Standard and optional equipment

●=Std , ○=Opt , —=not available

Category	Description	SK650DLC-11	
		Separate boom Attachment	Ultra long Attachment (92'7" {28.2 m} height)
ENGINE	ISUZU 6WG1 (Tier IV Final certified)	●	●
	Exhaust DOC SCR system	●	●
	Alternator 24 V / 90 A	●	●
	Starter motor 24 V / 7 kW (9.4 hp)	●	●
	Batteries 2 x 12 V (205 Ah)	●	●
	Reversible hydraulic drive cooling fan	●	●
	Auto deceleration function	●	●
	Auto idle stop	●	●
HYDRAULIC SYSTEM	3 work modes H, S, Eco	●	●
	Power boost (5,480 psi {37.8 MPa})	●	●
	Heavy lift mode	●	—
	Pressure release function	●	●
	Independent travel function	●	●
	Auto warm up system	●	●
	Proportional Hand Control (for Rotation & N&B piping)	●	●
	Hydraulic oil VG46	●	●
PIPING	Rotation & N&B piping	●	●
	Quick coupler piping	●	●
CABIN	Air suspension seat with heating	●	●
	10-inch color monitor	●	●
	LED door light	●	●
	Air-conditioner	●	●
	Radio (AM/FM, AUX, USB, Bluetooth® and hands-free telephone)	●	●
	Harness for cab four lights and cab yellow flasher	●	●
	Top and front window wiper	●	●
	12 V power outlet	●	●
LIGHTS	LED work lights : 2 on cab top & 1 on cab bottom & 2 on rear counterweight & 1 on upper structure	●	●
	LED work lights : 2 on boom	●	—
	LED work lights : 2 on arm	—	●
WORKING EQUIPMENT	NEXT Separate boom attachment package	●	—
	NEXT Ultra Long attachment package for 92'7" {28.2 m} pin height	—	●
	9'10" {3.0 m} insert boom	○	●
	NEXT water spray (water pump & tank are not included)	●	●
C/W	Layered C/W 33,500 lb {15,200 kg} with swing flashers	●	●
	Removable counterweight	○	○
UNDERCARRIAGE	VLC (Hydraulic variable undercarriage)	●	●
	23.6" {600 mm} triple grouser HD shoe (without taper type)	●	●
	Full track guide	●	●
	Lower frame guard	●	●
SAFETY	Engine emergency stop switch	●	●
	Pump emergency mode (KPSS release switch)	●	●
	Emergency accel dial	●	●
	Emergency manual valve for lowering cab	●	●
	Safety valve for boom & arm & jib cylinder	●	●
	Demolition spec cab (P5A glass, Tilting function)	●	●
	Top cab guard (Top guard level II ISO 10262:1998)	●	●
	Bar-type front guard (Front guard level II ISO 10262:1998)	●	●
	3-side 270-degree camera system	●	●
	Cab lower mirror	●	●
	Falling object deflector	●	●
	Seatbelt indicator on display	●	●
	Travel alarm	●	●
	Cab interference prevention system	●	●
	Stability warning system	●	●
	Public address system	●	●
OTHERS	Auto lubrication system	●	●
	Harness for engine room light	●	●
	NEXT pin removal equipment	●	●
	Bucket cylinder guard	●	●
	KOMEXS Machine monitoring	●	●
	3-year/3,000-hour warranty	●	●

Bluetooth® is a registered trademark of the Bluetooth SIG Inc. *GRAMMER is trademark of GRAMMER AG. registered in Germany and other countries.
Note: This catalog may contain attachments and optional equipment that are not available in your area. And it may contain photographs of machines with specifications that differ from those of machines sold in your areas. Please consult your nearest KOBELCO distributor for those items you require. Due to our policy of continuous product improvements all designs and specifications are subject to change without advance notice.
Copyright by KOBELCO CONSTRUCTION MACHINERY CO., LTD. No part of this catalog may be reproduced in any manner without notice.

KOBELCO CONSTRUCTION MACHINERY U.S.A. INC.

www.KOBELCO-USA.com

KOBELCO is the corporate mark used by Kobe Steel on a variety of products and in the names of a number of Kobe Steel Group companies.

Inquiries To:

Bulletin No. SK650DLC-11_NA_2E_2604